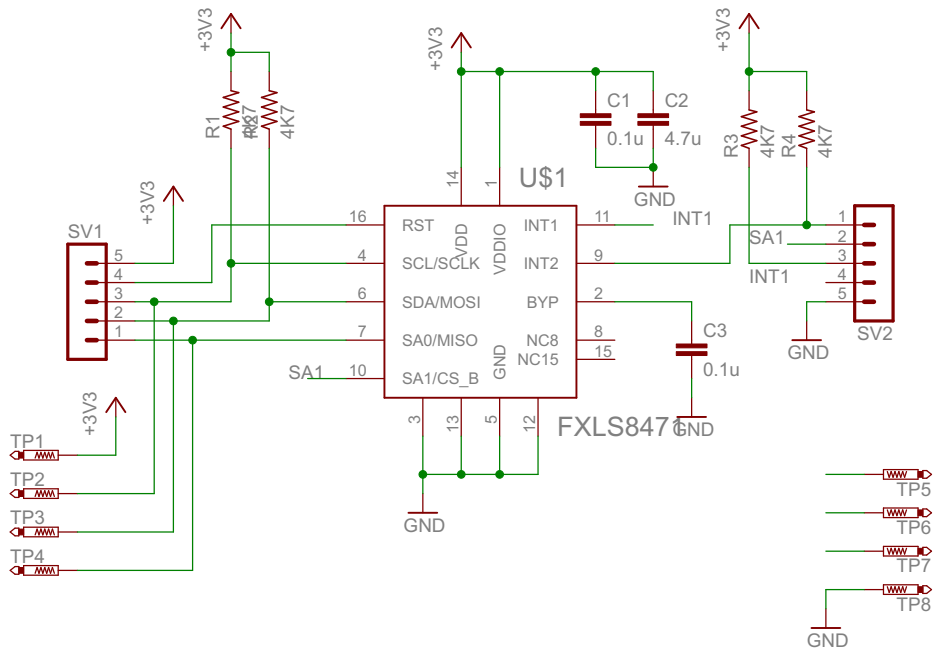
+3V3
R1
4K7
R2
4K7
+3V3
SV1
5
4
3
2
1
+3V3
TP1
TP2
TP3
TP4
+3V3
14
1
U$1
16
RST
VDD
VDDIO
INT1
11
INT1
4
SCL/SCLK
INT2
9
6
SDA/MOSI
BYP
2
7
SA0/MISO
NC8
8
NC15
15
GND
SA1
10
SA1/CS_B
3
13
5
12
FXLS8471
GND
C1
0.1u
C2
4.7u
GND
C3
0.1u
GND
+3V3
R3
4K7
R4
4K7
SA1
INT1
1
2
3
4
5
SV2
GND
TP5
TP6
TP7
TP8
GND