Table of Contents

1	TITLE
2	Notes and Block Diagram
3	S32K116 MCU
4	OPEN SDA
5	Power Supply/SWD
6	I/Os HEADERS

Revision History

Rev	Description	Date	APPROVED
X1	Initial draft	10-Jul-20	Jorge Cervantes
A	Release draft	22-Jul-20	Jorge Cervantes

(XS32K116EVB2Q048 , 47484) Rev-A

C U S T O M E R E V B

C A U T I O N :

This schematic is provided for reference purposes only. As such, NXP does not make any warranty, implied or otherwise, as to the suitability of circuit design or component selection (type or value) used in these schematics for hardware design using the NXP S32K family of Microprocessors. Customers using any part of these schematics as a basis for hardware design, do so at their own risk and Freescale does not assume any liability for such a hardware design.

Signals (ports) have not been routed via busses as this makes it harder to determine where each signal goes.

User notes are given throughtout the schematics.

Specific PCB LAYOUT notes are detailed in ITALICS

Notes:

- All components and board processes are to be ROHS compliant
- All connectors and headers are denoted Jx/Px and are 2.54mm pitch unless otherwise stated
- All jumpers are denoted Jx. Jumpers are 2mm pitch
- Jumper default positions are shown in the schematics. For 3 way jumpers, default is always posn 1-2.
  2 Pin jumpers generally have the "source" on pin 1.
- All switches are denoted SWx
- All test points (SMT wire loop style) are denoted TPx
- Test point Vias (just through hole pads) are denoted TPVx

3 Different test points used in design:

TPVx - Through Hole Pad small

TPHx - Through Hile Pad Large (for standard 0.1" header). Also used on IO Matrix (IOMx)

TPX - Surface Mount Wire Loop

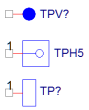

Automotive Product Group
6501 William Cannon Drive West
Austin, TX 78735-8598

This document contains information proprietary to NXP and shall not be used for engineering design, procurement or manufacture in whole or in part without the express written permission of NXP Semiconductors.

ICAP Classification: CP: IUO: PUBI: X

Designer: Angel Gonzalez	Drawing Title: XS32K116EVB2Q048	
Drawn by: Jakkireddy	Page Title: TITLE PAGE	
Approved: Jorge Cervantes	Size B / Document Number SCH-47484 PDF: SPF-47484	Rev A
	Date: Wednesday, August 19, 2020	Sheet 1 of 6

Jumper Table

REF DES	JUMPER	PAGE NAME
J110,J109,J111	1-2	03 S32K116 MCU
J104	1-2	04 OpenSDA interface
J10,J107	1-2	05 Power Supply/SWD
J108,J15	1-OPEN	05 Power Supply/SWD

PE Note - 1-OPEN menas keep jumper shunt on one pin and left other pin open
- user will use that jumper shunt when ever requried

DNP Table

REF DES	ASSY_OPT	PAGE NAME
R742,R711,R643,R644,R744, L512,R740,R727,D60,R683,R750, R569,R684,R672,R664,R665,D59, R747,C144,R670,R762,R746,R668	DNP	03 S32K116 MCU
R734,R70,R5,R41,C1,R38,R14, C15,R20	DNP	04 OpenSDA interface
R622,R594,R613,R536,R618, R621,R117,R617,R614,R620, R611,R570,R606,R610,R619, R661,R612,R616,R170,R615	DNP	05 Power Supply/SWD
R751,R717,R748,R716,R749	DNP	06 I/O Headers

BLOCK DIAGRAM

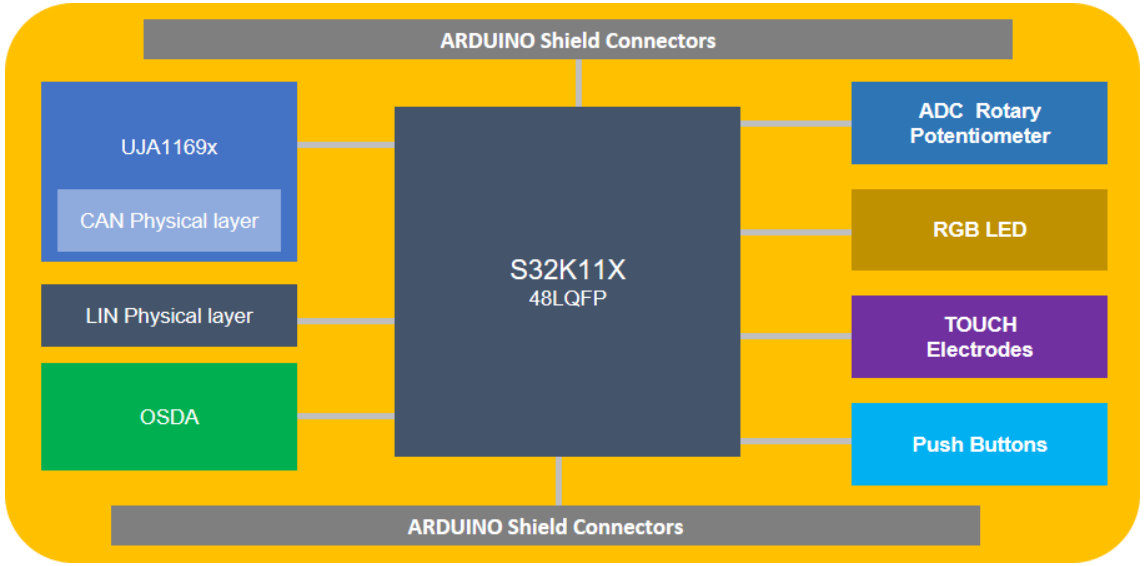

1. Unless Otherwise Specified:
   All resistors are in ohms, 1% and 5 %
   All capacitors are in uF, 10% , 20 % and 5%
   All voltages are DC
   All polarized capacitors are aluminum electrolytic

2. Interrupted lines coded with the same letter or letter combinations are electrically connected.

3. Device type number is for reference only. The number varies with the manufacturer.

4. Special signal usage:
   _B Denotes - Active-Low Signal
   <> or [] Denotes - Vectored Signals

5. Interpret diagram in accordance with American National Standards Institute specifications, current revision, with the exception of logic block symbology.

ICAP Classification: CP: ___ IUO: PUBI: _X__
Drawing Title: XS32K116EVB2Q048
Page Title: NOTES
Size B | Document Number SCH-47484 PDF: SPF-47484 | Rev A
Date: Wednesday, August 19, 2020 | Sheet 2 of 6

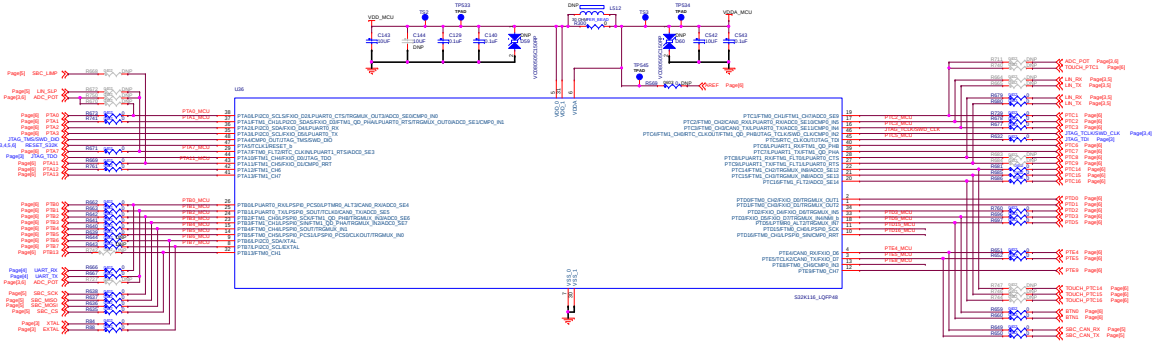

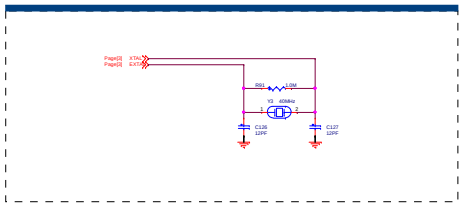

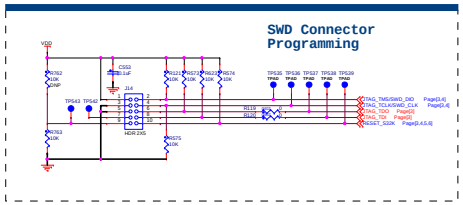

EAR Classification	CD:	MD:	PUBL: X
Drawing Title:	XS32K116EVB2Q048		
Page Title:	MCU S32K116-LQFP48		
Size: D	Document Number: SCH-47484 PDF: SPF-47484		Rev: A
Date: Wednesday, August 19, 2020	Sheet 3 of 6		

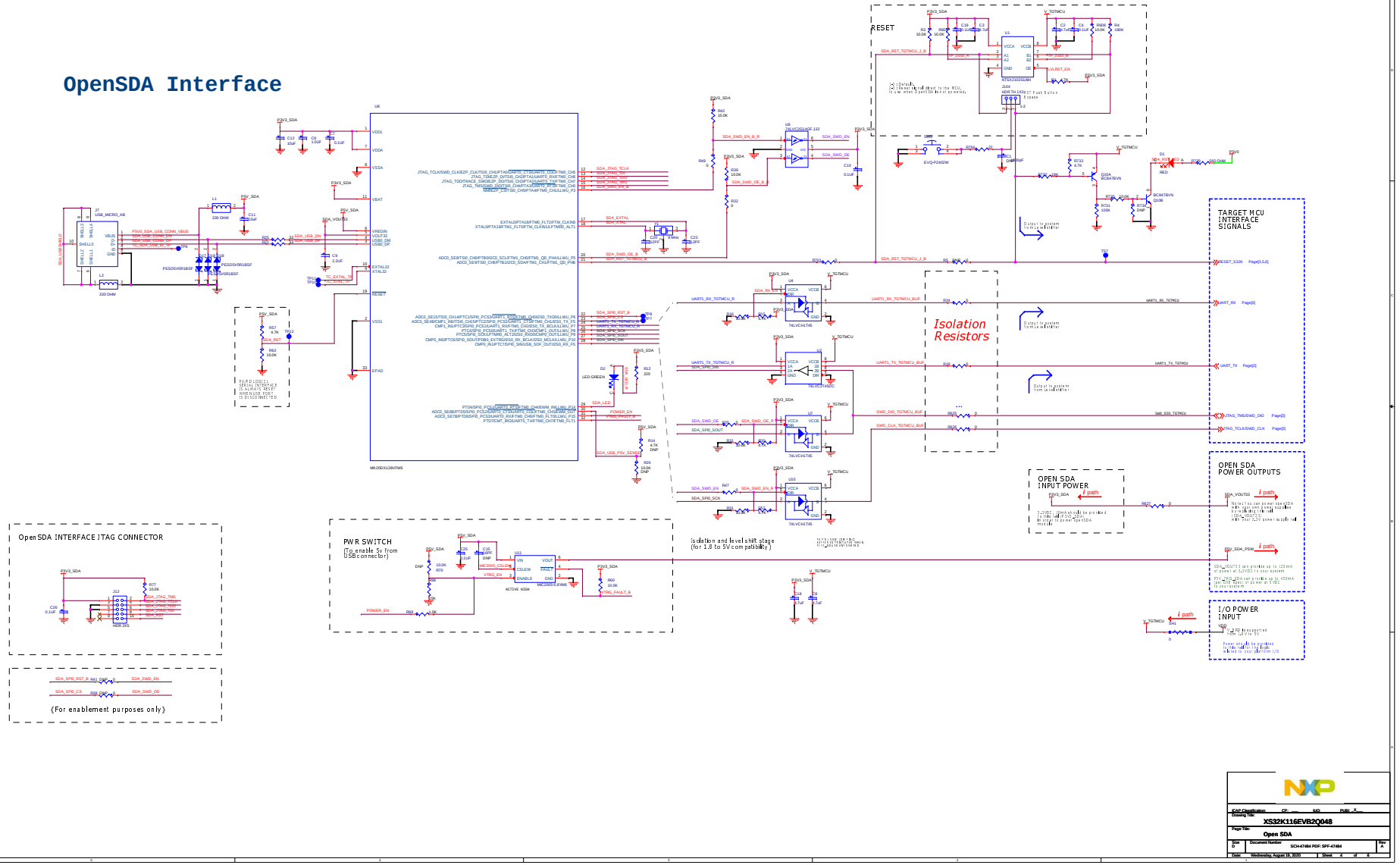
OpenSDA Interface
RESET
Isolation Resistors
TARGET MCU INTERFACE SIGNALS
OPEN SDA POWER OUTPUTS
OPEN SDA INPUT POWER
I/O POWER INPUT
Open SDA INTERFACE JTAG CONNECTOR
PWR SWITCH
(To enable 5v from USB connector)
Isolation and level shift stage
(for 1.8 to 5V compatibility)
{For enablement purposes only}
XS32K116EVB2Q048
Open SDA
SCH-47484 PDF: SPF-47484
Wednesday, August 19, 2020

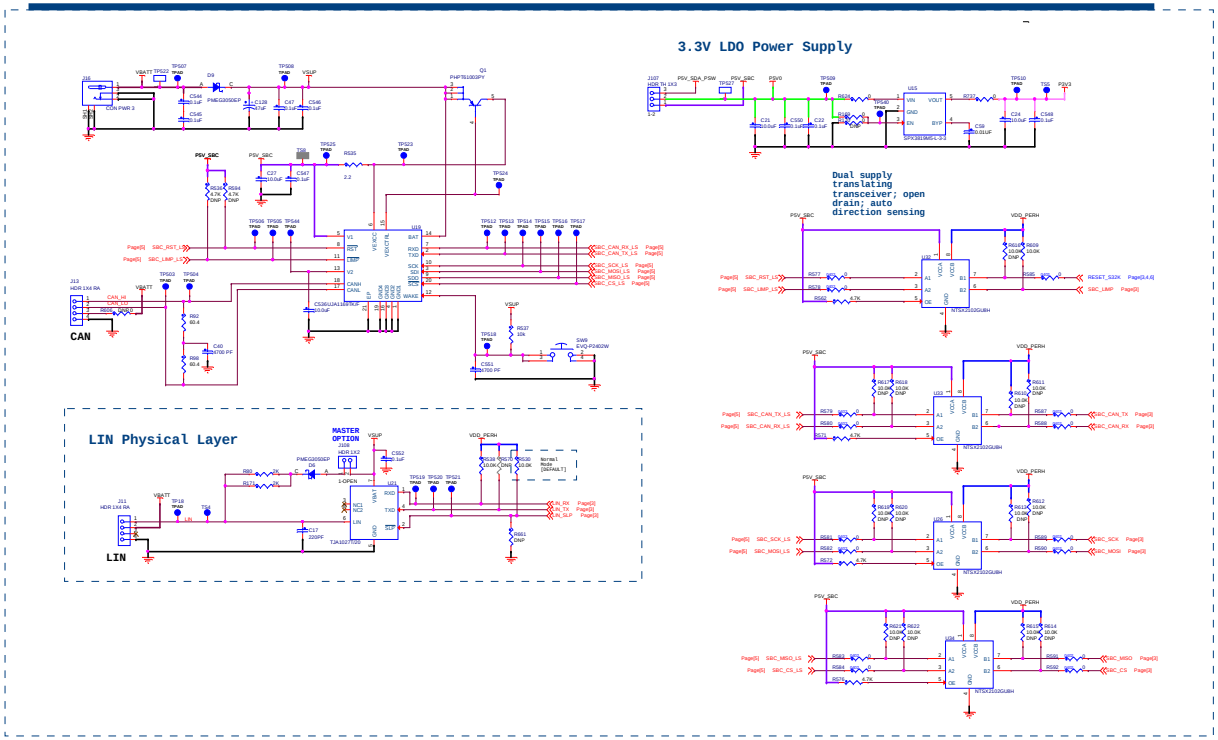

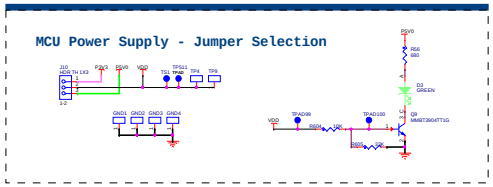

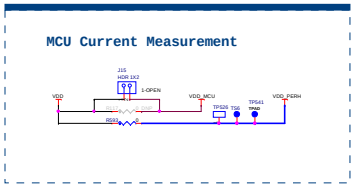

CAP Classification	CP	I/O	PUBL X
Drawing Title: XS32K116EVB2Q048			
Page Title: Power Supply / SWD			
Size D	Document Number SCH-47484 PDF: SPF-47484		Rev A
Date: Wednesday, August 19, 2020	Sheet 5 of 6		

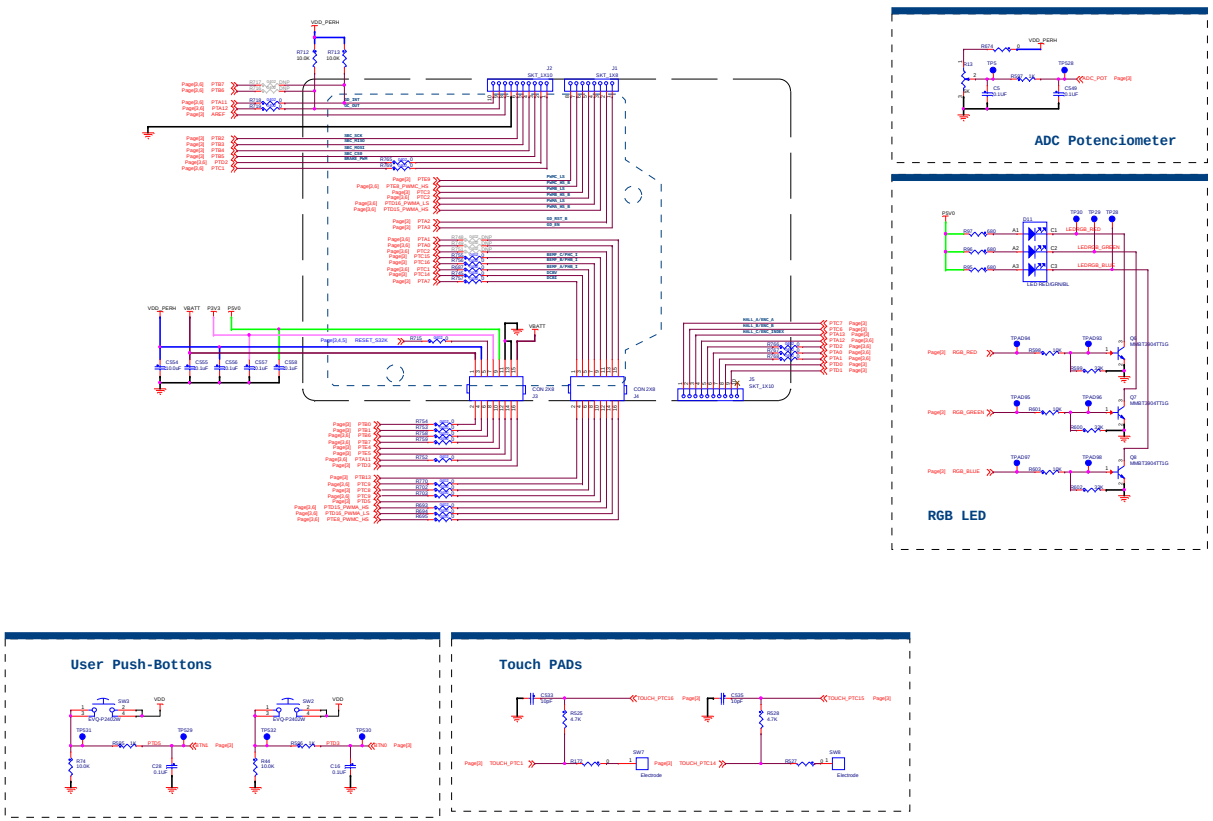

EAP Classification	CP:	I/O:	PUBL: X
Drawing Title:	XS32K116EVB2Q048		
Page Title:	I/O Headers		
Size: D	Document Number: SCH-47484 PDF: SPF-47484		Rev: A
Date: Wednesday, August 19, 2020		Sheet 6 of 6	