Battery Management System for Automotive and industrial applications

Emmanuel Carcenac

BL AAA
Distribution Business Development

November 19, 2019

SECURE CONNECTIONS FOR A SMARTER WORLD

Automotive Global Megatrends

Driving the need for next generation silicon capabilities

Autonomy

Electrification

Connectivity

Target: Zero Emission

Daimler announces $1.8 billion investment to produce Mercedes EQ-branded electric vehicles in China | Electrek

- Feb. 26th 2018 1:08 pm ET

@FredericLambert

China keeps securing electric vehicle investments from foreign automakers and the latest is coming from Daimler.

Volkswagen spends billions more on electric cars in search for mass market

Green the theme of Frankfurt Auto Show 1/31

By **Andreas Cremer** | FRANKFURT

Volkswagen is stepping up its shift to electric cars and plans to invest more than 20 billion euros ($24 billion) in zero-emission vehicles by 2030 to challenge pioneer Tesla in creating a mass market.

Ford plans $11 billion investment, 40 electrified vehicles by 2022

Jim Hackett (L), President and CEO of Ford Motor Company, speaks at the Ford press preview at the North American International Auto Show in Detroit, Michigan, U.S., January 14, 2018. 1/2

By **Nick Carey and Joseph White** | DETROIT

Ford Motor Co will significantly increase its planned investments in electric vehicles to $11 billion by 2022 and have 40 hybrid and fully electric vehicles in its

FINANCIAL TIMES

Volvo to use electric motors in all cars from 2019

Carmaker calls time on vehicles powered solely by an internal combustion engine

Volvo Cars announced that every model from 2019 onwards would have an electric motor, making it the first traditional carmaker to call time on vehicles powered solely by an internal combustion engine.

German court rules cities can ban diesel cars to tackle pollution | World news | The Guardian

Tue 27 Feb 2018 11.34 EST

Millions of heavily polluting vehicles could eventually disappear from roads across Germany after its top administrative court ruled that cities have the right to ban diesel motors in an effort to improve deadly air quality levels.

BBC NEWS

France set to ban sale of petrol and diesel vehicles by 2040

France is set to ban the sale of any car that uses petrol or diesel fuel by 2040, in what the ecology minister called a "revolution".

BBC NEWS

New diesel and petrol vehicles to be banned from 2040 in UK

New diesel and petrol cars and vans will be banned in the UK from 2040 in a bid to tackle air pollution, the government has announced.

Ministers have also unveiled a £255m fund to help councils tackle emissions, including the potential for charging zones for the dirtiest vehicles.

Electric Vehicle Timeline

BMI Research
A FitchGroup Company

Tesla to begin Model 3 volume production

Tesla targets annual sales of 500,000

PSA to launch first electrified models on Efficient Modular Platform (EMP)

JLR will electrify all models

Tesla targets annual sales of 1mn units

Renault-Nissan plans joint platform for EVs

Subaru to launch first full EV

Volvo targets 1mn total sales of electrified cars

Daimler plans 15-25% of production to be electric

Aston Martin plans all models to be hybrid by 'mid-2020s'

Aston Martin plans 25% of sales to be electric

2017 | 2018 | 2019 | 2020 | 2021 | 2022 | 2023 | 2024 | 2025 | 2026 | 2027 | 2028 | 2029 | 2030

18 Months Too Optimistic

GM plans to produce 500,000 electrified vehicles by year-end

Volvo will no longer sell cars solely powered by ICEs

Daimler targets annual sales of 100,000 units

Ford to have 40% of global models electrified (hybrid, PHEV, BEV)

Ford to have 13 new electrified models

PSA to have all 7 PHEV and 4 BEV models built on EMP

Porsche plans 50% of cars to be electric

BMW plans 15-25% of sales to be electrified

VW plans to have 30 new EVs accounting for up to 25% of sales (2-3mn units)

Honda plans two-thirds of sales to be electrified

2019/2020 a Key Period for xEV Launch

xEV Market Evolution

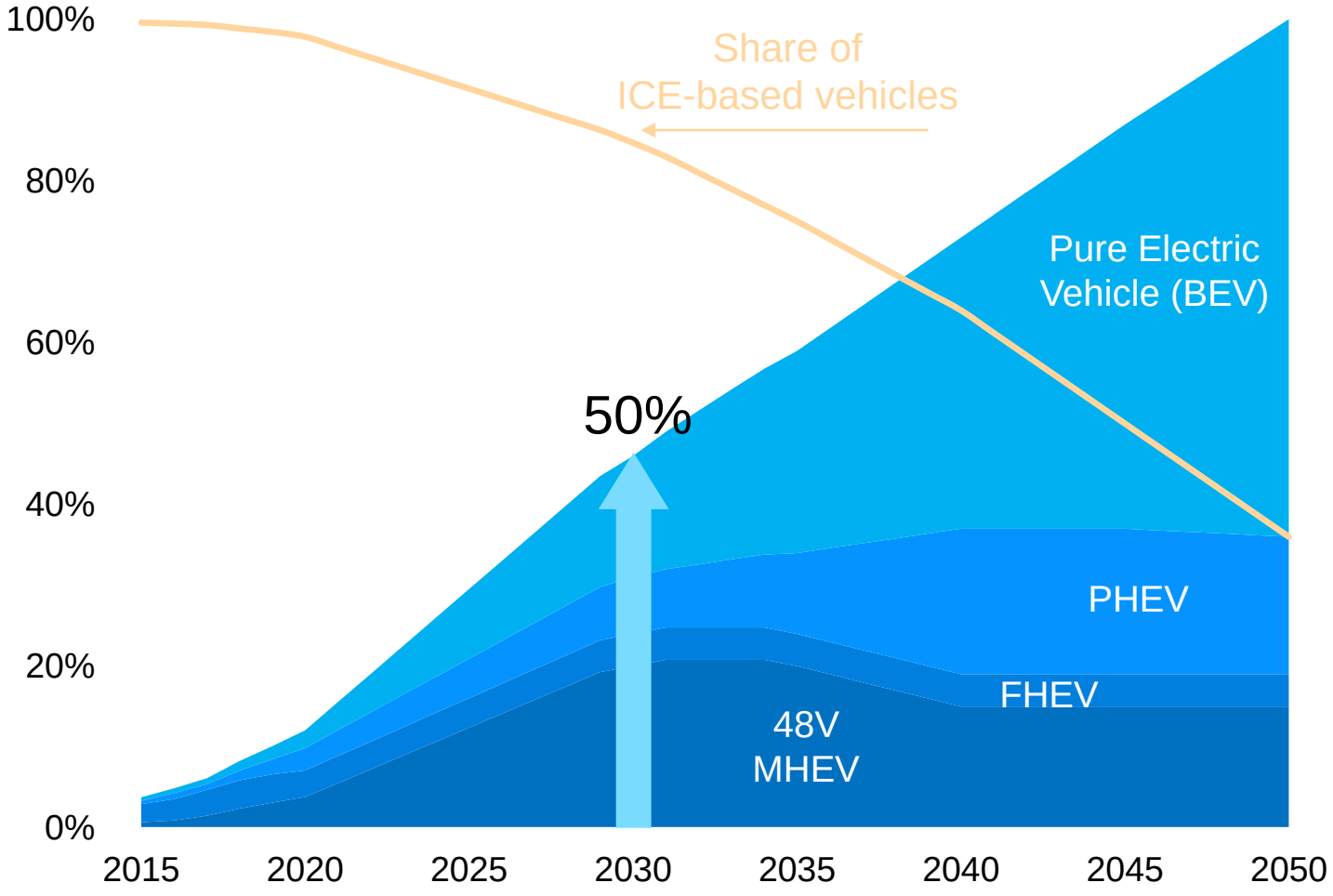

- 2030: ~50% of all vehicles sold contain electrified powertrains
- Dynamic market environment with emerging (xEV) OEMs
- China major market driver
- Europe leading in 48V hybrid

Vehicle Electrification: Diversity of Approaches

Electrification Levels	E0	E1	E2	E3	E4	E5
Common Name	**Combustion Engine (ICE)**	**Mild Hybrid (M-HV)**	**Full Hybrid (F-HV)**	**Plug-in Hybrid (PHEV)**	**Range Extended EV (RE-BEV)**	**Pure Electric Vehicle**
Example	Ford Mustang 	Honda Insight 	Toyota Prius 	FCA Pacifica 	BMW i3 	Nissan Leaf 
Combustion Engine	●●●●	●●●●	●●●	●●●	●●	
Battery System	12V	12V, 48V	LV, HV	LV, HV	LV, HV	LV, HV
Mains Charging	-	-	-	✓	✓	✓
Electric Traction	-	10 – 20kW	15 – 60kW	40 – 80kW	40 – 80kW	> 80kW
CO_2 reduction at vehicle	N/A	-20%	-30%	-50% to -75%	-50% to -75%	100%

Battery Management System Introduction

Main Functions of BMS Systems

Safety

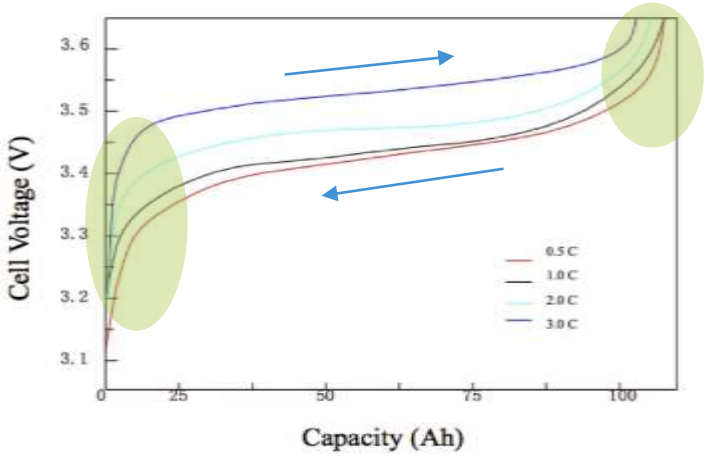

Danger:
- Over voltage
- Extra heat
- Unstable chemical stage
- Thermal runaway=>fire/explosion
- Low temperature charge

Performance

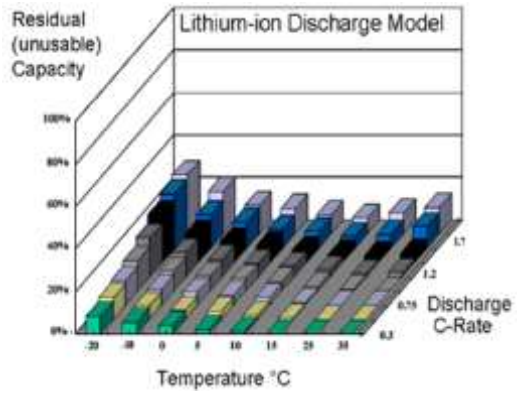

Requirements:
- Safe & fast charging
- Discharge optimization
- State of charge (SOC) estimation
- State of health (SOH) estimation

Multi-Cell function

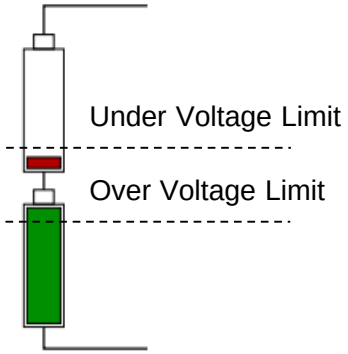

Challenges:
- Up to hundreds of cells
- Manufacture mismatch
- Capacity degradation
- Lifetime degradation

Key BMS Functions

Safety	Performance	Multi-Cell function
V/I/T measurement	V/I/T measurement Coulomb counting Internal resistance calculation	Cell balancing

Why Safety is Critical for Lithium-Ion Battery Applications

- Battery over-voltage (**OV**)
  - Secondary chemical reactions triggered: battery overheating, smoke emission, inflaming or explosion are very likely. OV typically close to 4 V
- Thermal runaway (**OT**):
  - Can start a positive temperature feedback mechanism, with the same consequences as an OV. OT typically close to 60 °C
- Battery under-voltage (**UV**):
  - Results in progressive breakdown of the electrodes substances. With LFP cells this may happen over a few cycles. UV typically close to 2 V
- Battery over-current (**OC**):
  - May result in the melting of the battery contactors. Major safety issue: impossibility to open the contactors and inability to drive the system to the disabled safe state
- Battery under-temperature (**UT**):
  - Loss of robustness of the contactors, reduction of the battery capability to provide current, dendrites. Need to limit current to avoid damage
- Need to comply with stringent safety standards –ISO 26262 for Automotive

How to Select Lithium-Ion Cell Chemistries?

Name	Chemistry	Symbol	Nominal voltage	Full charge	Full discharge	Safe	Cost USD/Kwh	Energy Density Wh/Kg	Discharge C-Rate	Cycle Life Times	Typical Auto Use Case
LCO	Lithium Cobalt Oxide	$LiCoC_2$	**3.6V**	4.2V	3.0 V	Low	Low	200	2C	500-1000	-
LMO	Lithium Manganese Oxide	$LiMn_2O_4$	**3.7V**	4.2V	3.0 V	High	High	150	1C	300-700	-
LFP	Lithium Iron Phosphate	$LiFePo_4$	**3.3V**	3.65V	2.5V	Very High	High	120	1C	1000-2000	14 V - 48 V
NCA	Lithium Nickel Cobalt Aluminum Oxide	$LiNiCoAlO_2$	**3.6V**	4.2V	3.0 V	Mid	Mid	260	1C	500	xEV
NMC	Lithium Nickel Manganese	$LiNiMnCoO_2$	**3.6V**	4.2V+	3.0 V	Mid	Mid	220	1C	1000-2000	48 V - xEV
LTO	Lithium Titanate	Li_2TiO_3	**2.4 V**	2.85V	1.8 V	Very High	High	80	30C	3000-7000	14 V
PB	Lead Acid	-	**2.0 V**	-	-	Thermally Stable	Very Low	30-50	0.2C	200-300	12 V

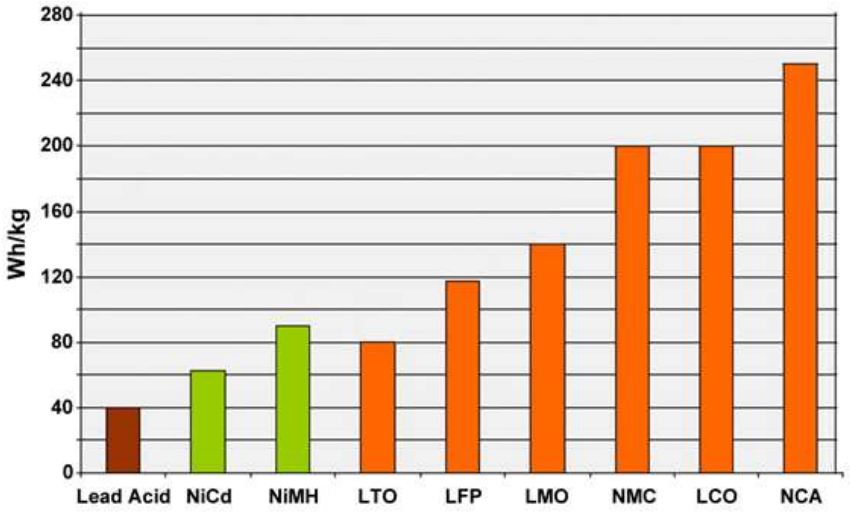

Source: http://batteryuniversity.com/learn/article/types_of_lithium_ion

Why Accurate Voltage Measurement for SOC Better Performances?

SOC accuracy depends on voltage measurement accuracy

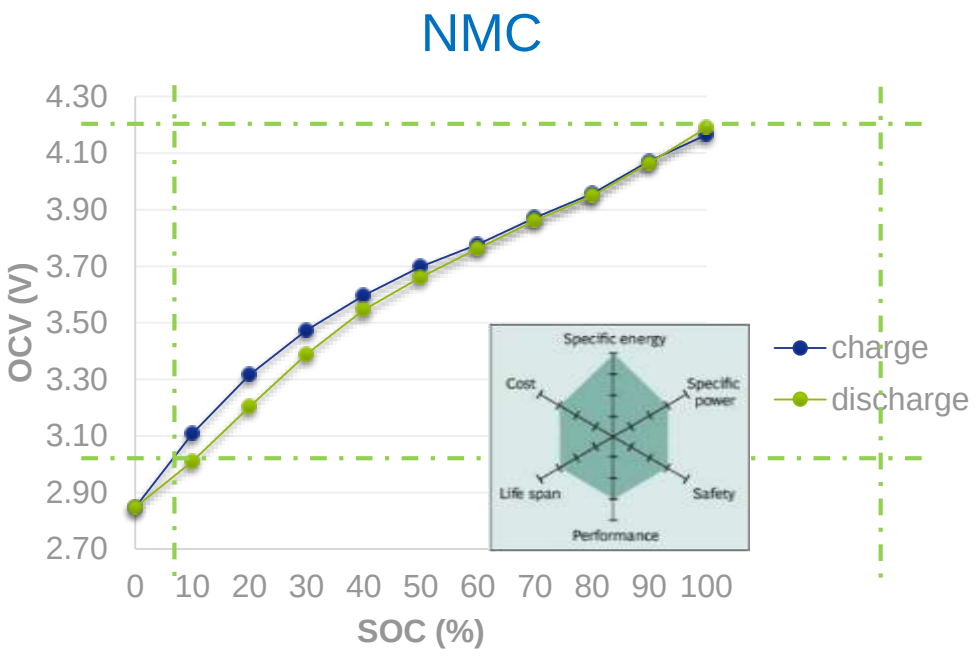

1 V ≡ 80% SOC
(12,5 mV/1% SOC)

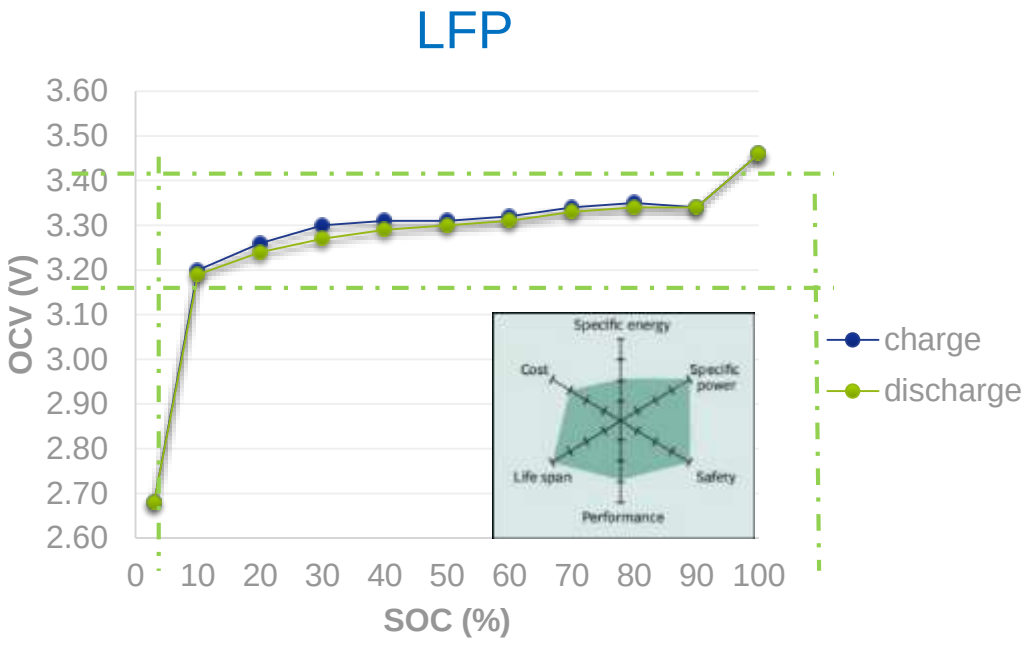

140 mV ≡ 80% SOC
(1,75 mV/1% SOC)

Why Accurate Current Measurement for SOC Better Performances?

- Initial state of change estimation is necessary and needs to be accurate
- Then current is integrated by using the Coulomb counting function
- SOC accuracy depends on measurement accuracy of both current and voltage

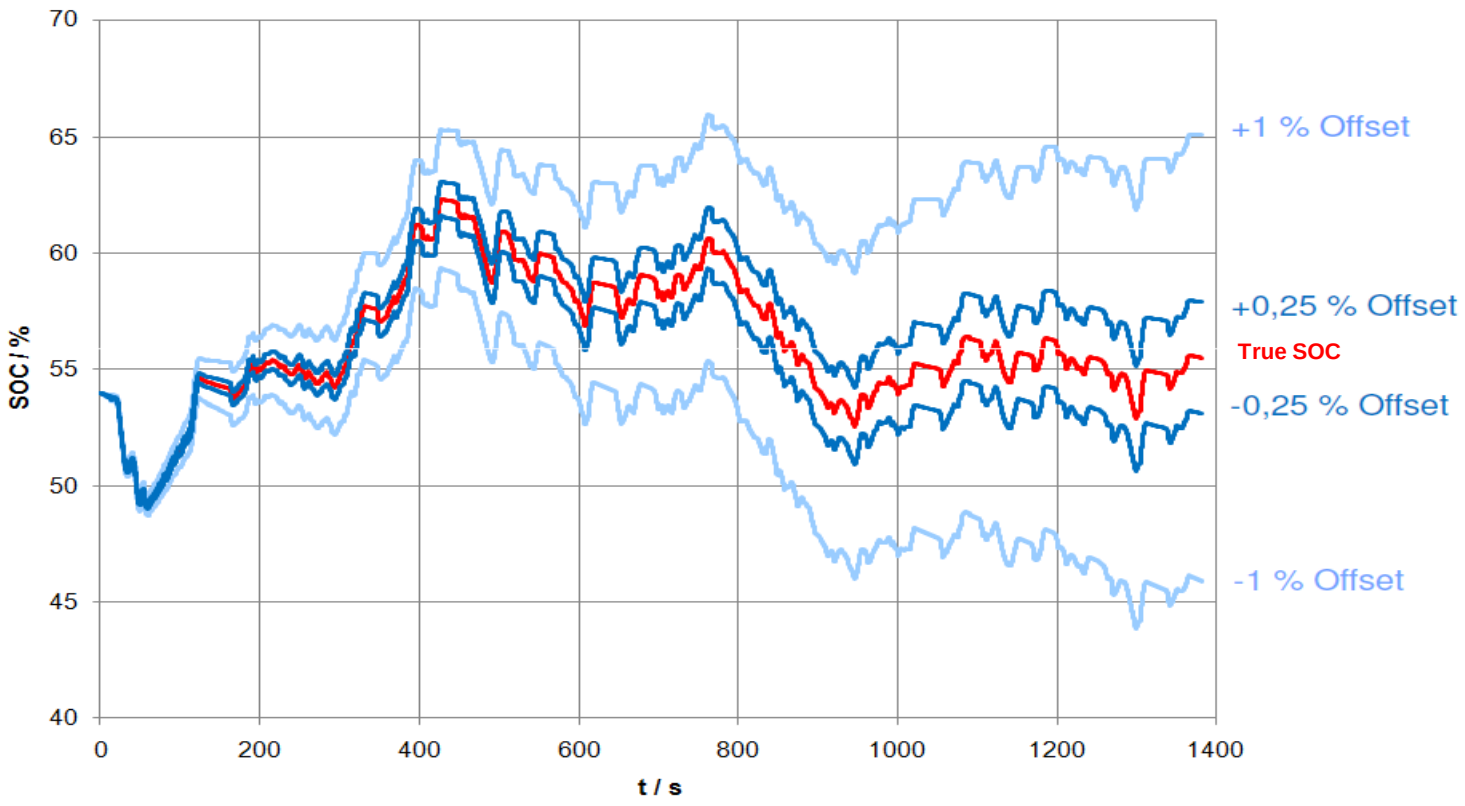

Why Synchronized Measurements for SOH Better Performances?

- State of Health = SOH
- Internal cell resistance is one of the many factors used to determine SOH
- SOH measurement requires a good synchronization of current and voltage measurements – typically 100 us

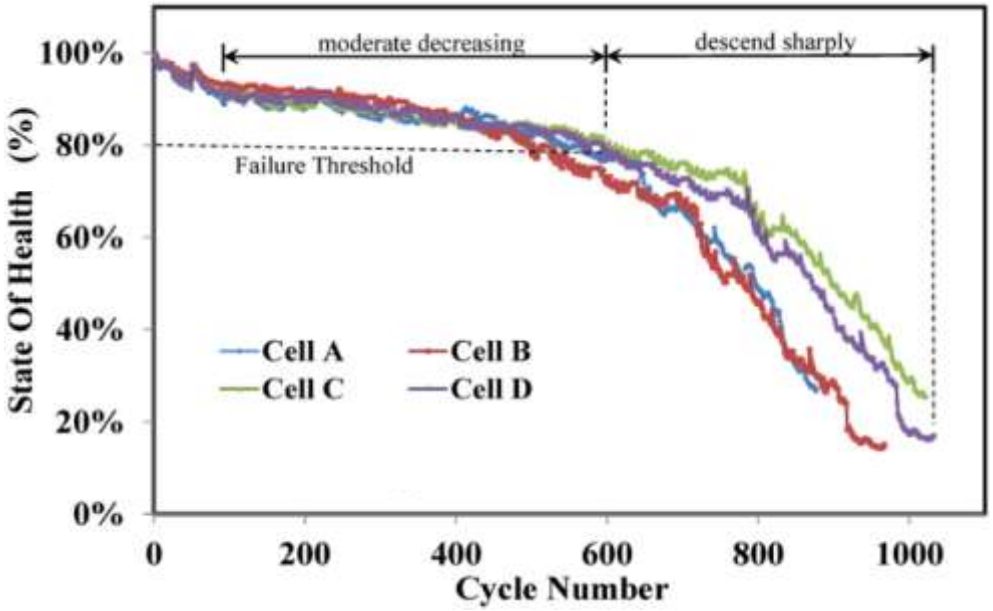

$$SOH = \left(\frac{R_i}{R_0}\right) * 100$$

Applications Solution for Battery Management System

Scalable Battery Cell Controller Portfolio

Targets Broad Range of Battery Management Applications

E-mobility

- Automotive
- Light EV
- Battery tram, ferry
- Urban delivery vehicles
- E-bike/scooter/snow scooter…
- …

Industrial

- Robot
- Autonomous guided vehicles
- Agricultural applications
- E-wheelchair
- …

Energy Storage System

- Smart grid ESS
- Home ESS
- UPS
- …

Consumer

- Hand tooling
- Garden tooling
- …

Li-ion BMS Application Overview

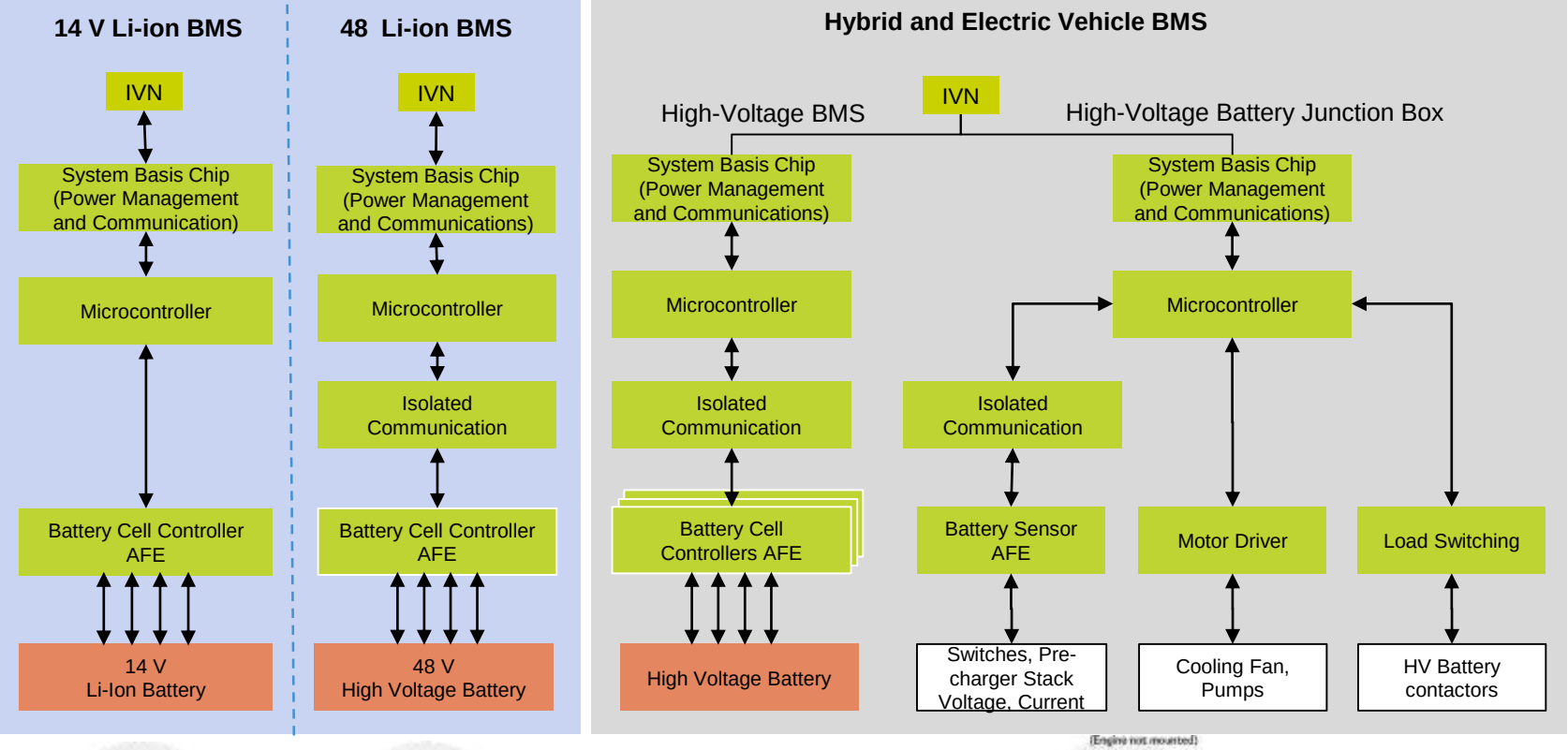

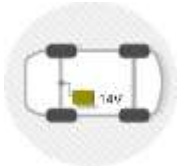

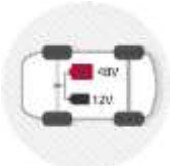

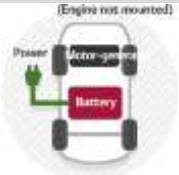

Level of Electrification

Advanced Start-Stop
14 V Li-ion Battery

48 V Mild Hybrid
48 V Li-ion Battery

EV/PHEV
High Voltage Li-ion Battery

HVBMS Centralized Application

Main advantages of centralized solution is to have short connections between each nodes (usually less than 0.5m) which brings the following benefits:

- Very limited signal attenuation/distortion allowing a 100% reliable communication up to 15 nodes (Rev B) on all temp range => excellent S/N and less attenuation
- Only one low cost single channel transformer between each nodes
- Loopback capability

*Production proven, reference design available

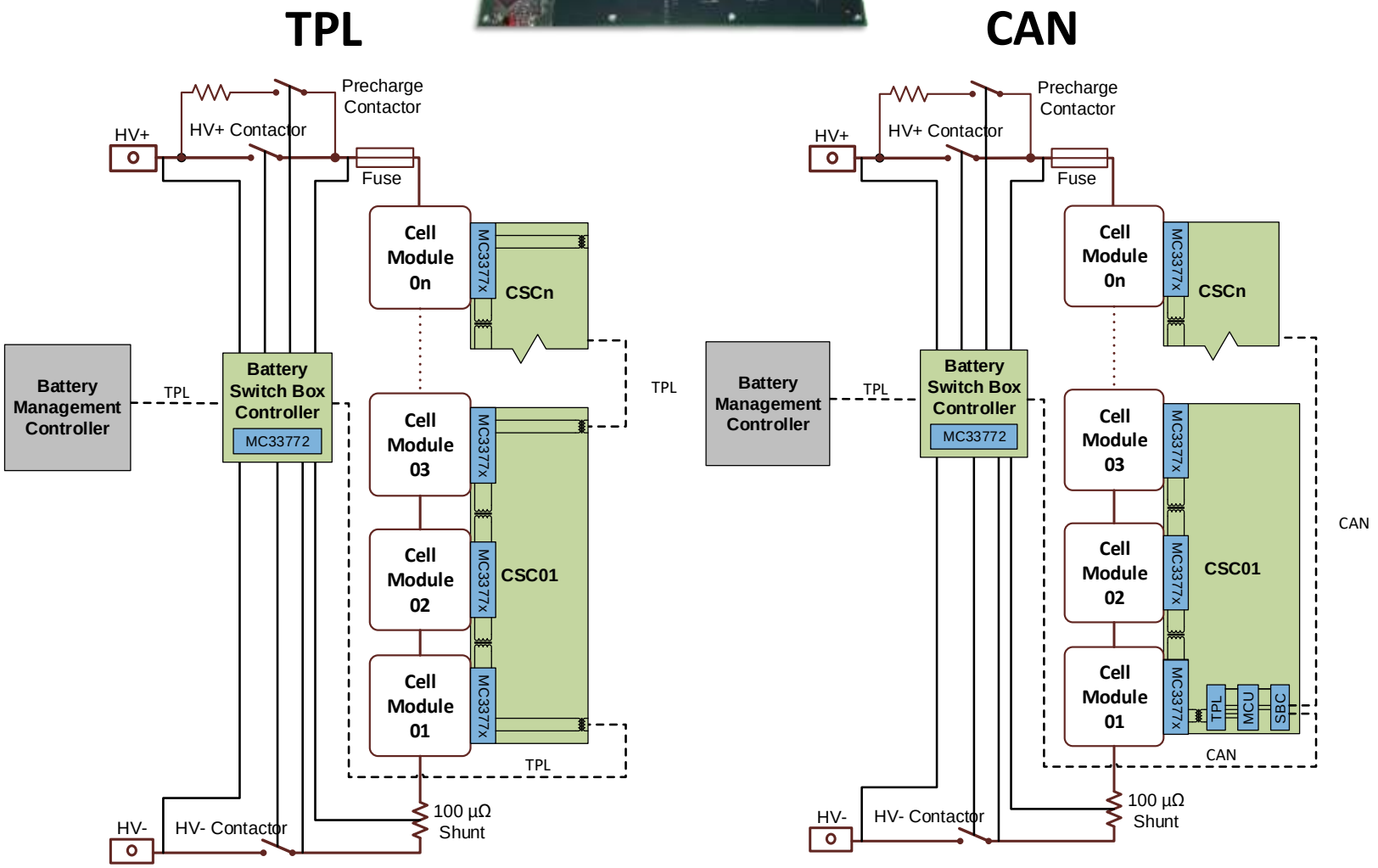

Differentiating features

NXP MC33771/2B Battery Cell Controller Solution

Differentiating Points

Battery topology flexibility

- Scalable SW & HW compatible BMS solution supporting **4 to 210 cells per daisy chain**
- MC33771B (7 to 14 cells) & MC33772B (3 to 6 cells) fully compatible
- Supporting centralized, distributed daisy chain, distributed CAN

High integration level

- Synchronized on-chip current sensor
- Synchronized on-chip coulomb counter
- Integrated passive balancing (300 mA per ch)
- Integrated power regulator

Fast & robust communication & DAQ

- 4.0 Mbps SPI or isolated 2.0 Mbps differential communication with transformer
- < 546 us conversion time for all measurements
- 3.6 ~ 4.1ms for sending command and read back **96** cell 16-bit voltage data

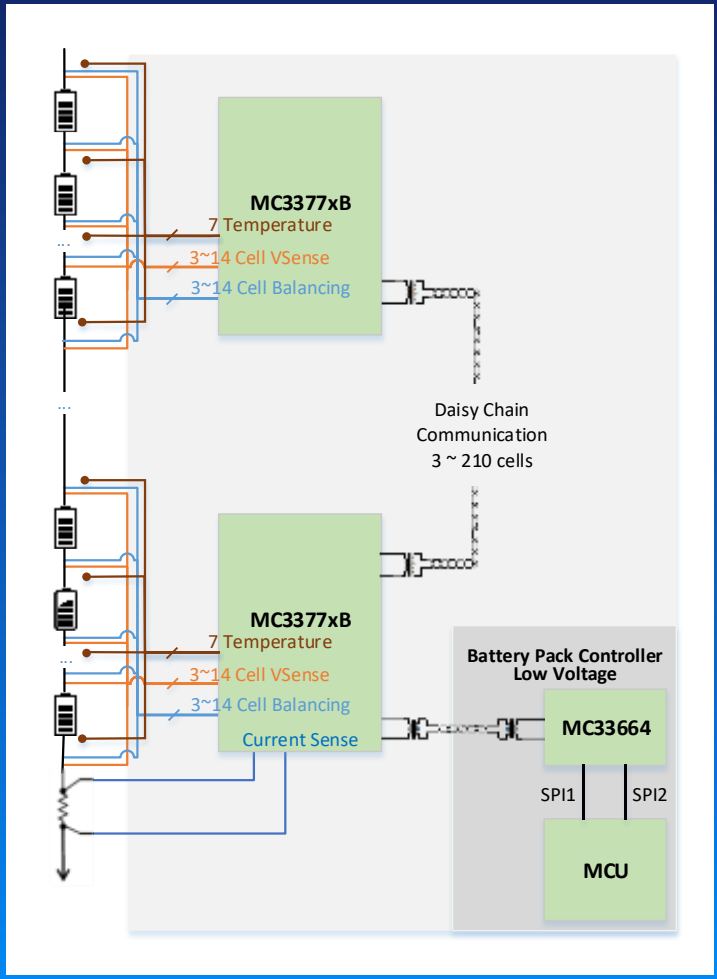

High lifetime measurement accuracy

- **± 0.8 mV** total voltage measurement error (after soldering & 1000 hrs HTOL aging)
- ± 0.5% total stack voltage measurement
- ± 0.5% accuracy integrated current sensor

Diagnosis and functional safety supporting ISO 26262 w/ single chip

- Single chip ASIL C capable (easy ASIL D)
- Sleep mode OV/UV and temperature monitor
- **> 40** integrated safety mechanisms detecting internal and external faults

Automotive robustness

- ESD, EMC; Hot Plug, AEC-Q 100
- Temp range: -40°C to 105°C
- Operational low-power mode

BCC next Revision (Rev C)

MC33771C – Improved Daisy Chain

MC33771C **TPL2** improvements:

- **Compatible** with MC33664
- Inductive & **capacitive** coupling support (current transformers & current external components)
- Up to **63 nodes in a single daisy chain**
- Support **20m** between each node
- **Loopback** support for 1 daisy chain.

MC33771C on chip **Averaging** measurement

- Reduces communication on TPL bus
- Higher acquisition frequency possible
- Smaller/cheaper anti-aliasing filter capacitor
- Improves noise performance

- The revC device is **pin compatible** with revB, the **Cell Management Controller (CMC) PCB** built with revB can be **fully reused**
- **Same Package and Pinout** between MC33771B & MC33771C
- **Minor TPL protocol** layer changes are required on the **Battery Management Controller (BMC)** when introducing the revC

MC33771B

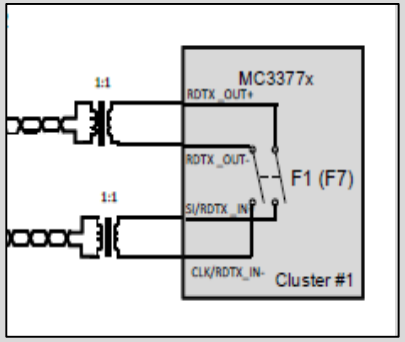

- TPL PHY is a bus which is cut by internal switches
- Each wire segment, bus switch, and transformer contribute to signal attenuation and limit the number of nodes
- TPL is compatible with the MC33664

MC33771C

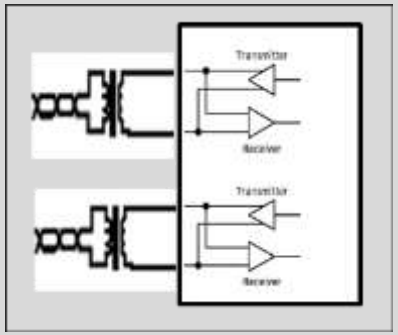

- TPL2 PHY bus is a series of lower power communication links
- Each node has a bidirectional repeater with transceivers for up and down communication
- TPL2 is compatible with the MC33664

Battery Cell Controller Comparison

Parameter	MC33771B	MC33771C
Voltage Channels	7 - 14	7 – 14 w/ Averaging
Supply Vpwr Range (Max Transient)	9.6V..61.6V (75V)	9.6V..61.6V (75V)
Cell Terminal Input Voltage Range	-0.3V to 5V	-0.3V to 5V
Typical Measurement Errror	± 0.8 mV	± 0.8 mV
Functional Safety	Single-chip ASIL C ASIL D Compliance	Single-chip ASIL C ASIL D Compliance
Isolated communication Speed	2 Mbps	2 Mbps
Communication Isolation	Inductive (*Capacitive)*	Inductive, Capacitive
Max Nodes per Daisy Chain	15	63 w/ Loopback
4Mbps SPI communication	Yes	No MPN (available w/ TPL MPN)
CRC Bit	8	8
Comms bit	40	48
Integrated Balancing	<300 mA	<300 mA
Balancing sleep mode	Yes	Yes
Deep sleep mode	No	No
GPIO / Analog measurement inputs	7	7
Current Channels	1	1
Coulomb counter	1	1
Package	64-pin LQFP-EP	64-pin LQFP-EP

- Increased bus bandwidth
- Improved noise
- 25% R/C BOM reduction

- Extended daisy chain
- Capacitive isolation
- Enhanced safety

Reference Designs

Key Features & System Overview

Creating safety.
With passion.

NewTec

- Permanent measurement of cell voltages
- Over-temperature protection
- Overcurrent / overvoltage detection
- Safe relay (breaker) control (ASIL C)
- Various definable Safe States
- LIN and CAN bus interface
- Crash detection
- Overcurrent control fuse
- Power supply with watchdog protection
- Control of up to 6 Lithium-ion battery cells

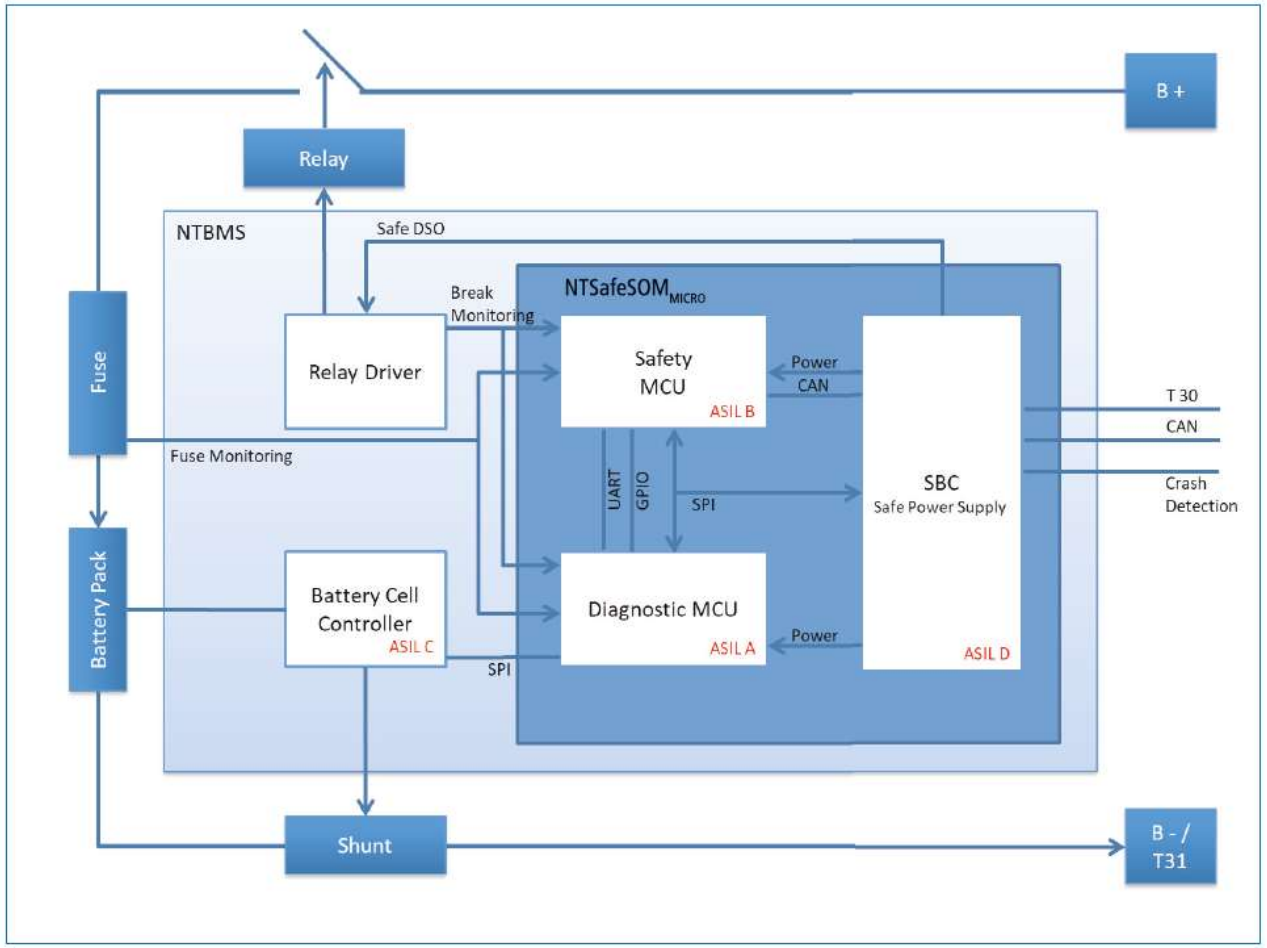

Courtesy of NewTec

Ready to Use MC33772 Based Safety BMS

Features

- 4 to 6 cell Li-ion battery
- Cell balancing circuit
- Intrusive diagnostics (MCU)
- Battery disconnecting switch control circuit
- 200 A perm/ 800A for 300ms
- Low power self-power consumption
- Cell voltage/ current/ temperature monitoring
- CAN bus interface

Customer Benefits

- Off the shelf 14V BMS ref design
- Application level safety concept
- NewTec professional Service

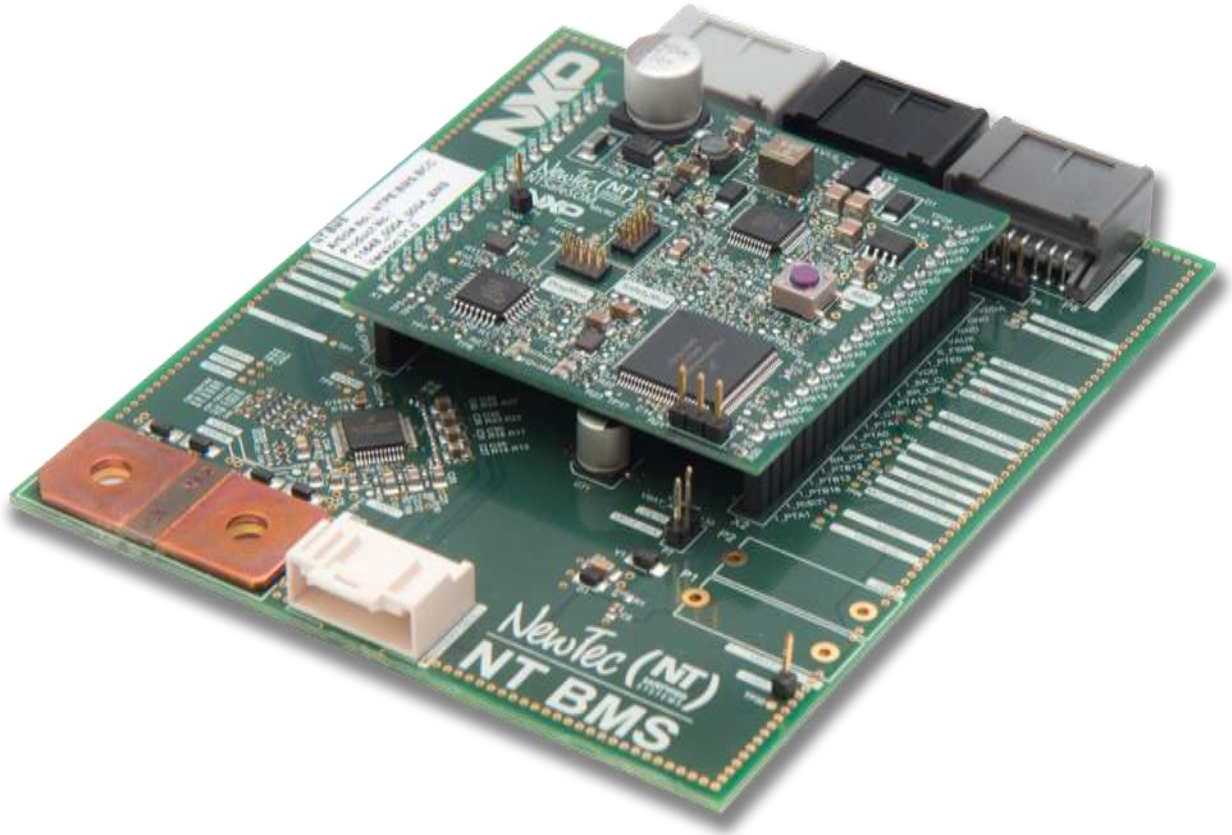

Battery Cell Controllers Reference Design Overview

Mature reference designs accelerating customer development

48V Mild Hybrid Auxiliary Battery

- Complete system design, targeting automotive applications
- Using **MC33771B**, MPC5744, FS6500
- Isolated communication with transformers
- Standard BOM based on revB datasheet
- Example integration with AutoSAR

Available

High Voltage Centralized BMS

- 56 cell support on 4x **MC33771C**
- S32K1 Microcontroller
- Designed and validated for automotive applications

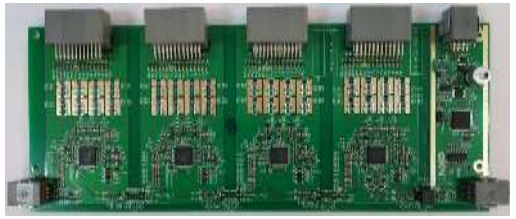

Release Q1 2020

High Voltage Distributed BMS

- BOM cost optimized CMC based on **MC33771C**
- Can be used in long daisy chain applications with up to 62 nodes
- Tested with S32K1 based BMC

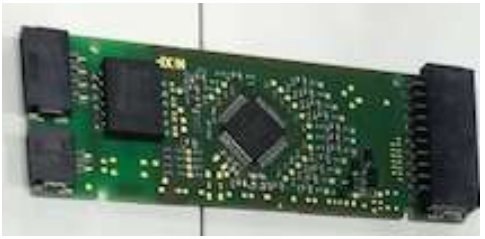

Release Q1 2020

Smart Battery for Drones

- 6-24 V single-chip BMS solution with **MC33772B**
- Compact low cost design
- S32K1 Microcontroller
- NFC / Authentication

Release Q1 2020

High Voltage Board Overview

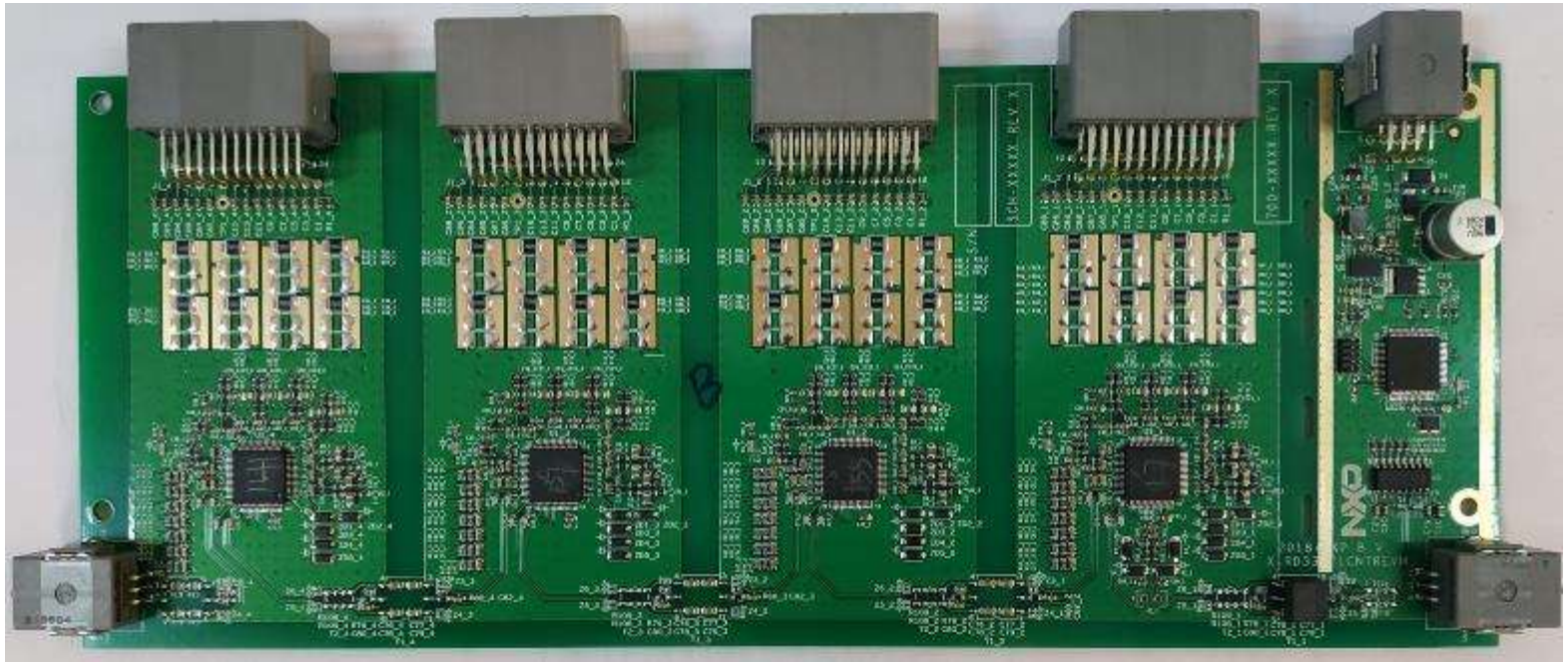

Functions	Feature
Voltage measurement	7~14 cells on each AFE, up to 56 cells, stackable
Temperature measurement	Each AFE have 1 channel for onboard cell balancing resistor measurement, 6 channel for external NTC measurement
Cell balancing	100~300mA per channel, configurable by solder CB resistors
Communication	On-board capacitor or Transformer Isolation selectable Off-board Transformer Isolation, stackable with other board MCU module could be bypass by resistor selection 1Mbps CAN baud rate

High Voltage Block Diagram Overview

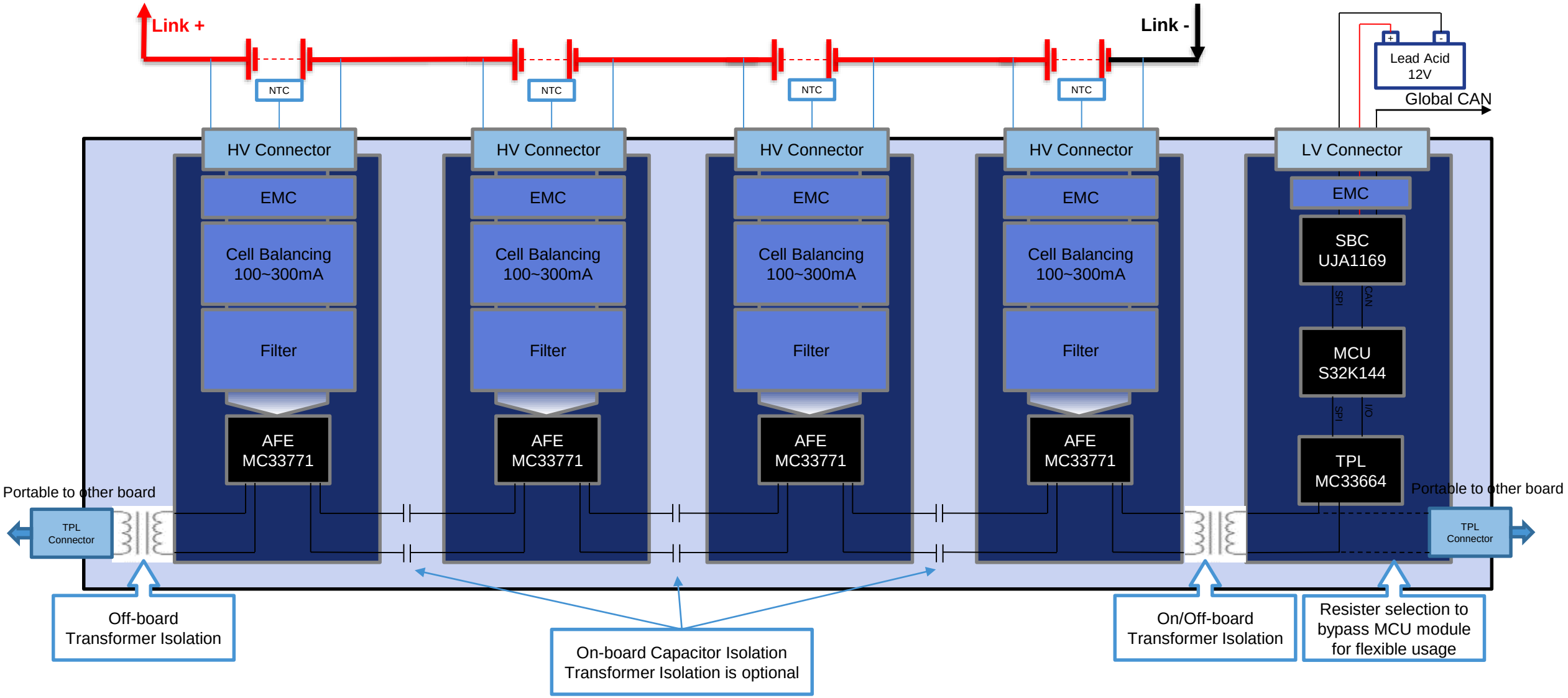

Block Diagram Example for Drone/E-Bike applications (No Safety and No isolation)

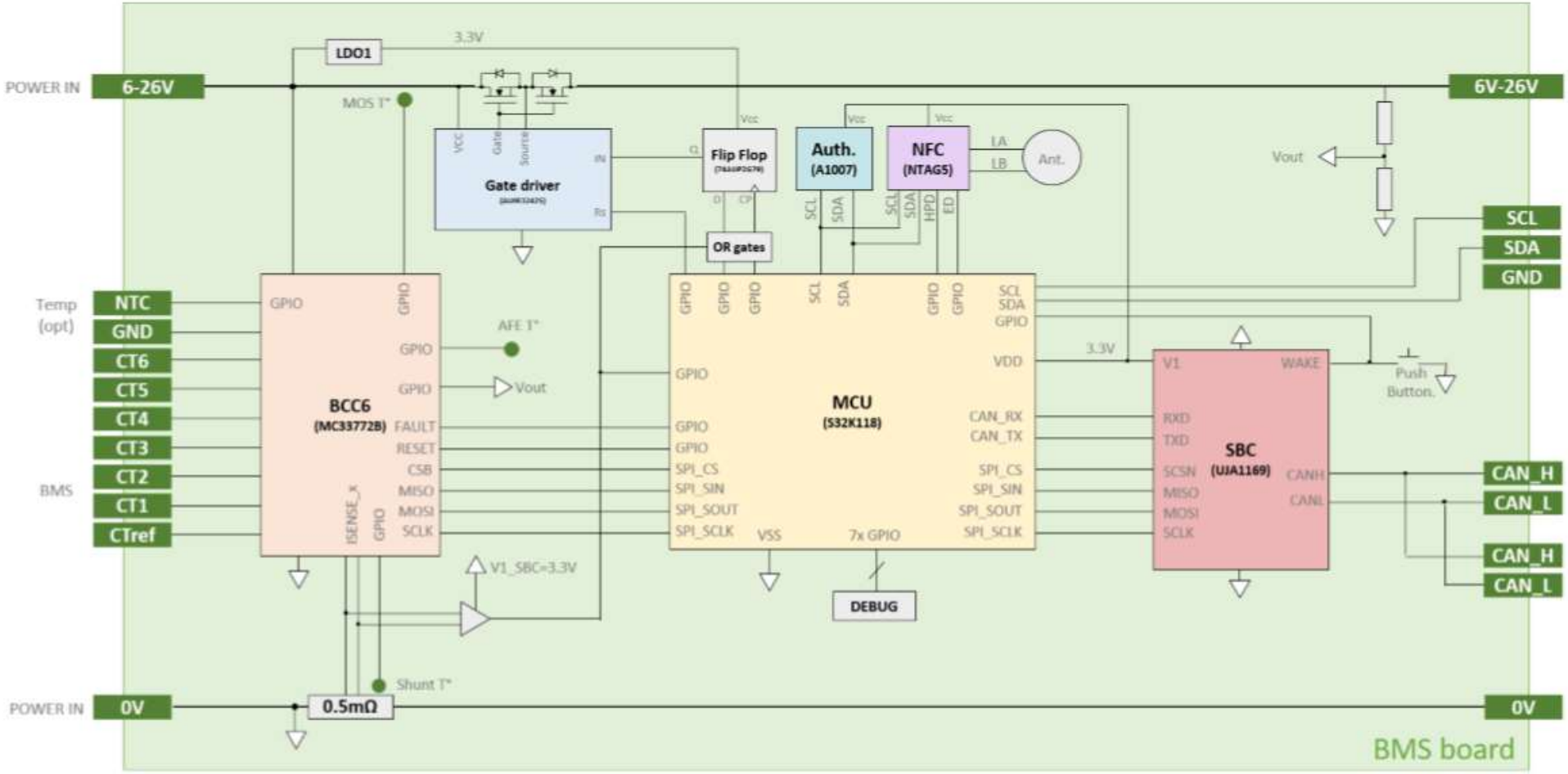

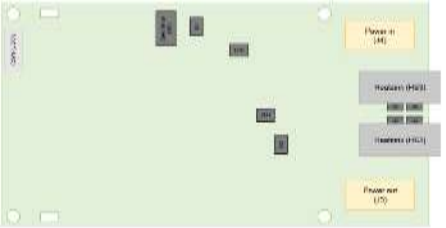

48V Block Diagram Example up to ASIL-C and No isolation

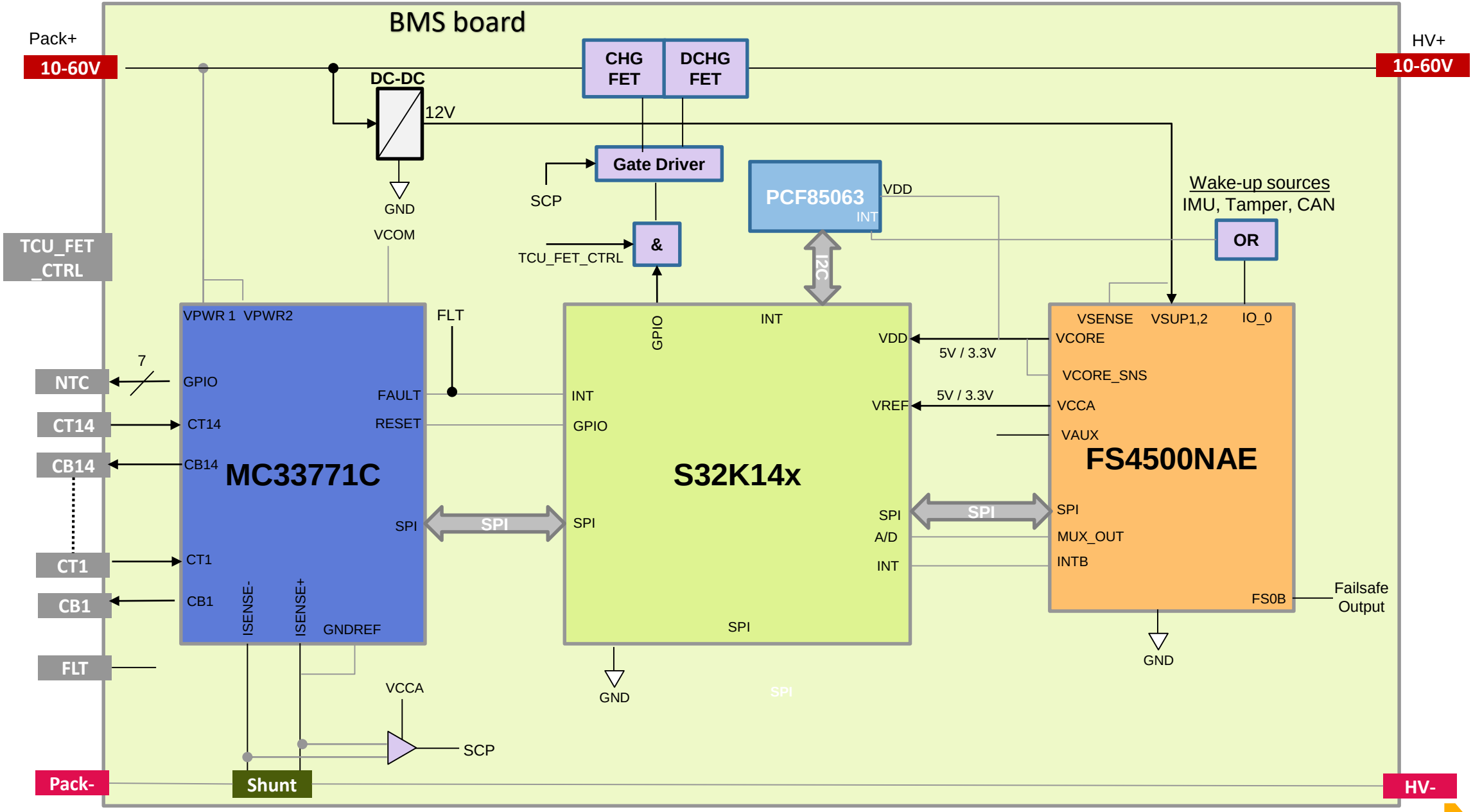

Half Distributed HV BMS SYSTEM

Architecture based on TPL communication

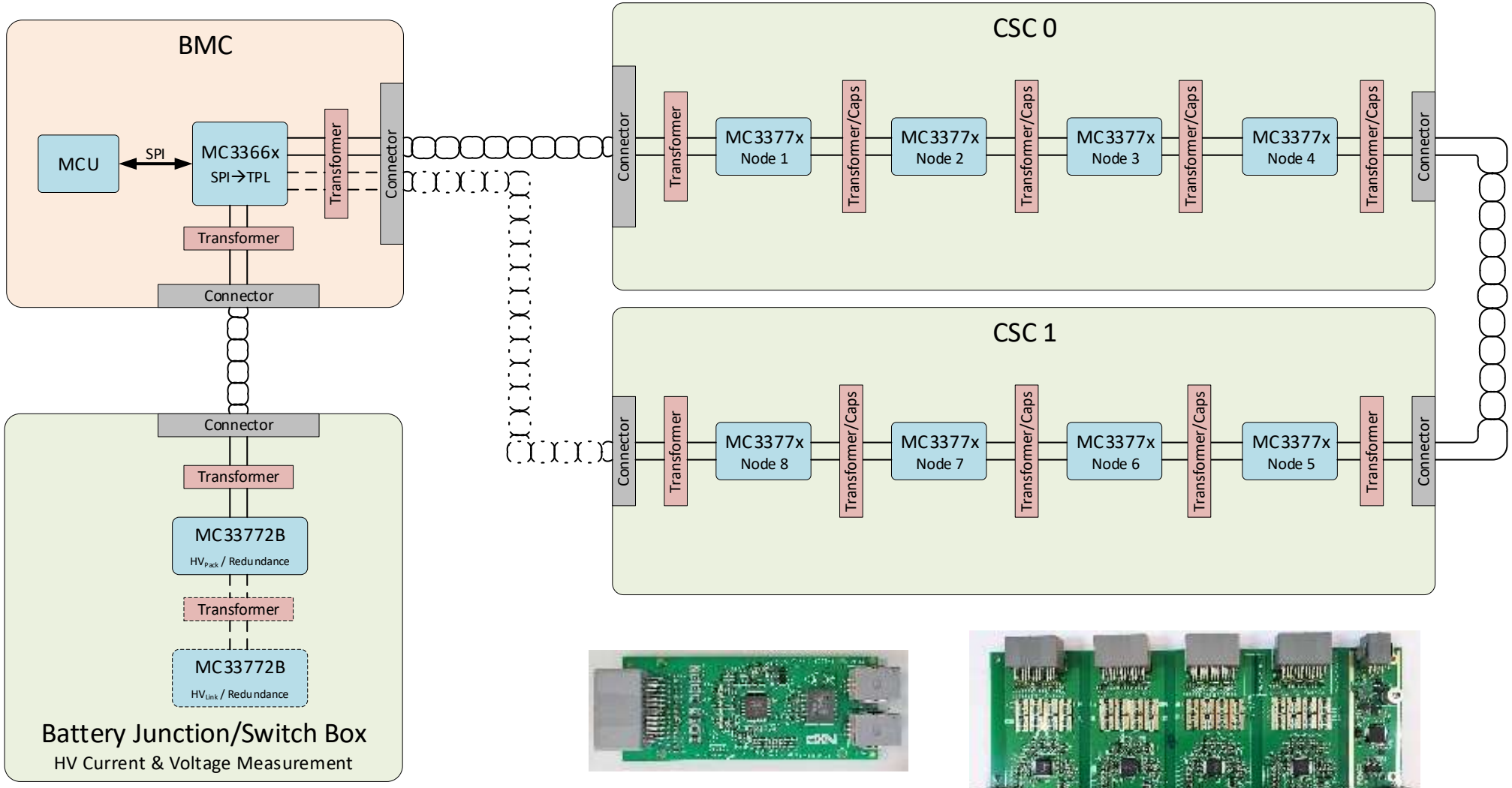

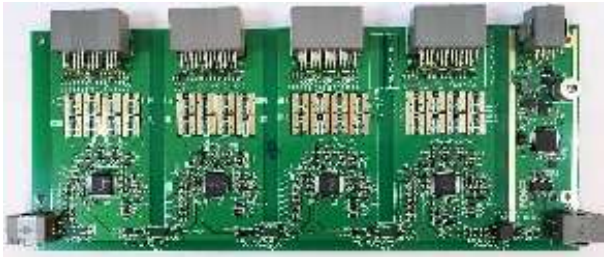

Functional Safety Support

NXP's Safe Assure Program

Simplify Customer Experience
ISO26262 system compliance process

Optimize Customer R&D Efficiency
Reduces time and complexity required to develop ISO26262 safety systems

Reduce Risk of Harm
Supports the most stringent Automotive Safety Integrity Levels (ASILs)

Safety Starts with Quality
Zero defect methodology from design to manufacturing to help ensure our products meet the stringent demands of safety applications

Functional Safety Standards

Automotive
ISO 26262

Industrial
IEC 61508

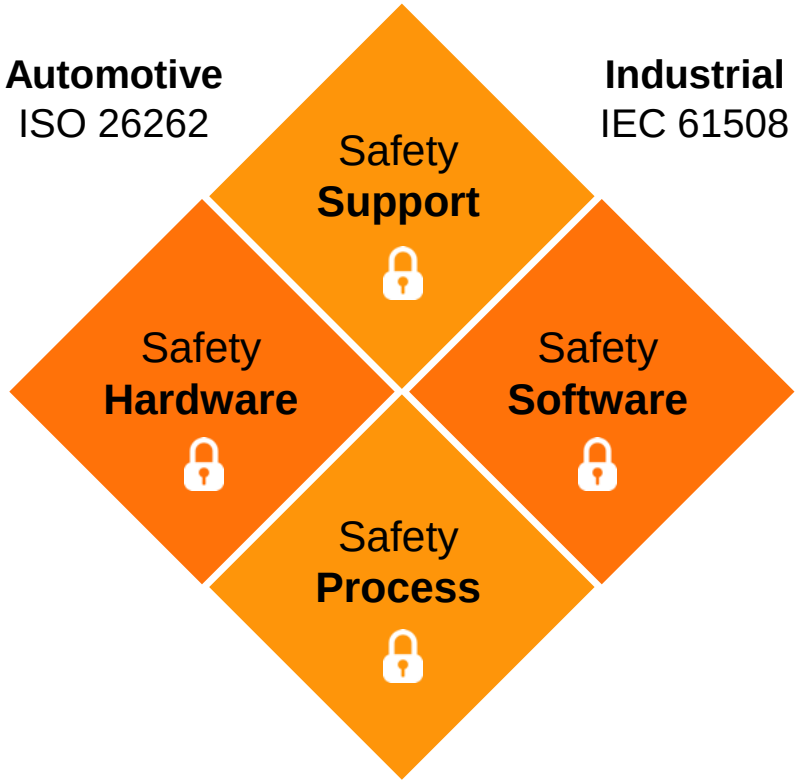

NXP Quality Foundation

SAFE ASSURE by NXP

SafeAssure Communities: Customer Support for Functional Safety

SafeAssure Community

Public Space for knowledge distribution and industry-wide news here

SafeAssure NDA

Private NDA space for customer to access safety documentation here

Support

Safety Expert Group composed of Safety Managers and Architects, Field and Application Engineers

Self Sufficient: Community users find answers to their questions an safety documentation requests

Functional Safety Community

- https://community.nxp.com/community/safeassure-community
- Register and click ‘Download NDA’. Complete and send to safeassure@nxp.com
- Once approved, click ‘GET YOUR ACCESS NDA DOCUMENTS’ banner
- Click on ‘MCUs and MPUs NDA Documents’ link to get –
  - Safety Manual
  - Standardized FMEDA
  - Safety Analysis Report (also known as ‘FMEDA Report’)
  - Confirmation Measures report
  - PPAP

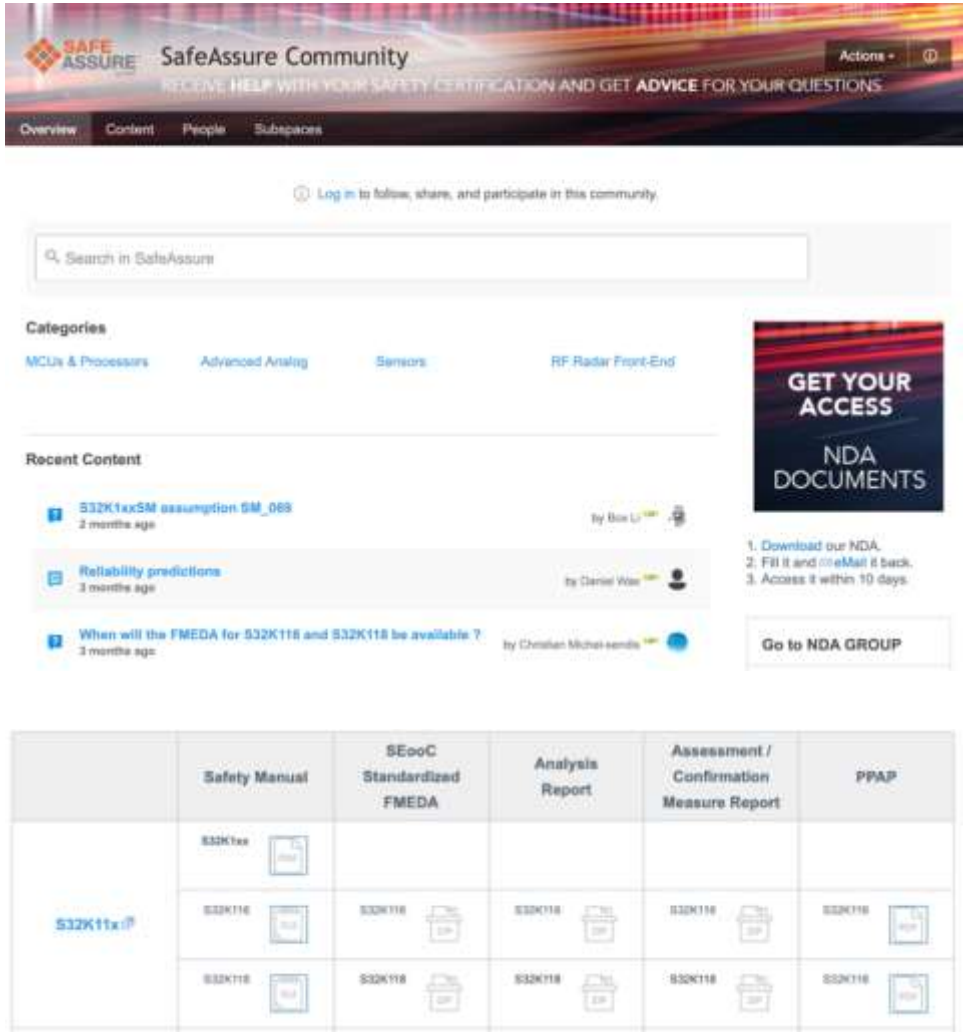

SafeAssure Documentation – Dynamic FMEDA

Mission Profile to ISO26262 Safety Metrics

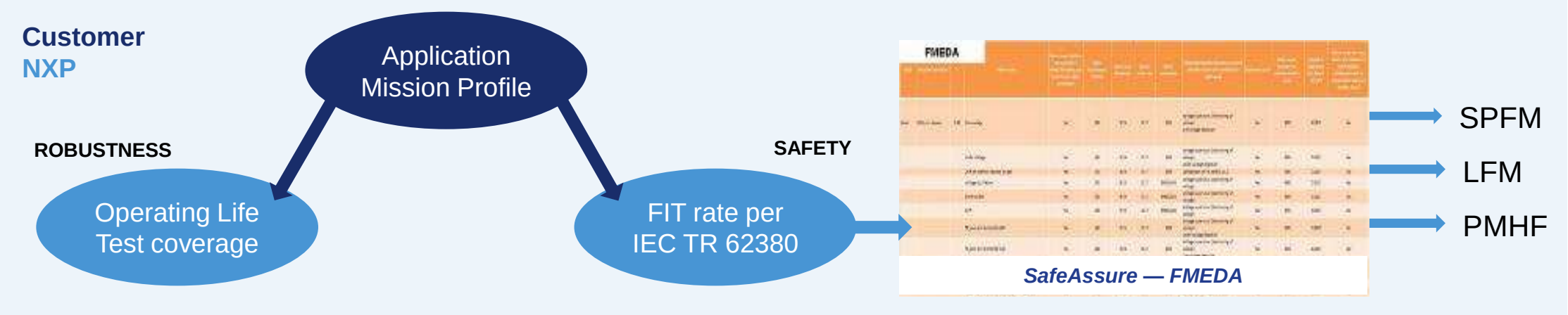

FMEDA calculates the safety metrics required by ISO26262

- SPFM: Single point fault metric.
  - Failure which is immediately violating one of the application safety goal (>99% for ASIL D)
- LFM: Latent point fault metric
  - Failure in the Safety Detection Mechanism (also called monitoring) which could lead to the violation of the application safety goal in conjunction with a single point fault (>90% for ASIL D)
- PMHF: Probability Metric of Hardware Failure
  - Residual probability to violate a safety goal (<10-8 for ASIL D)

	ASIL B	ASIL C	ASIL D
SPFM	>90%	>97%	>99%
LFM	>60%	>80%	>90%
PMHF = Random Hardware Failure	$< 10^{-7}$	$<10^{-7}$	<10 -8

BCC Rev C Enablement Tools

Battery Cell Controllers evaluation boards and SW for revC

High Voltage Centralized BMS

- 56 cell support on 4x **MC33771C**
- S32K1 Microcontroller
- Designed and validated for automotive applications

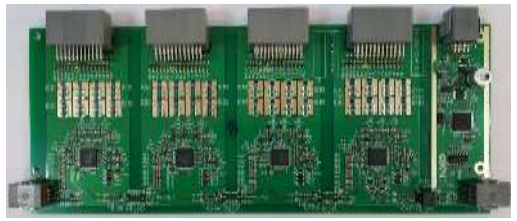

Release Q1 2020

High Voltage Distributed BMS

- BOM cost optimized CMC based on **MC33771C**
- Can be used in long daisy chain applications with up to 62 nodes
- Orderable on NXP.com

Release Q1 2020

DUAL TPL EVB

- Extension for S32K1 MCU
- 2x MC33664 for loopback capability
- To be used with HVBMS distributed BMS
- Orderable on NXP.com

Release Q1 2020

- Evaluation GUI : S32K144EVB + DualTPL EVB ------ TPL ----- 33771C EVB : Q1 2020

NXP BCC Rev C Evaluation GUI – With S32K Firmware

Supports S32K FW update if needed
Supports TPL communication for daisy chain
Provide device registers configuration and measurements access

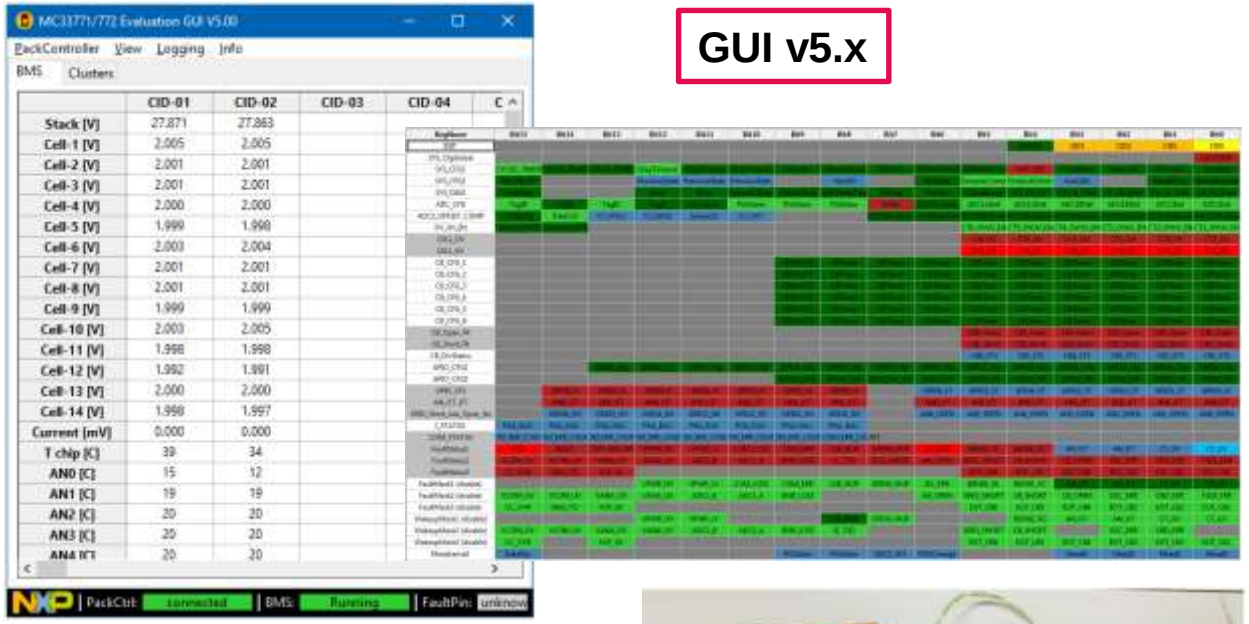

GUI v5.x

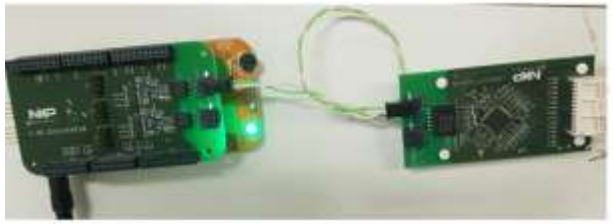

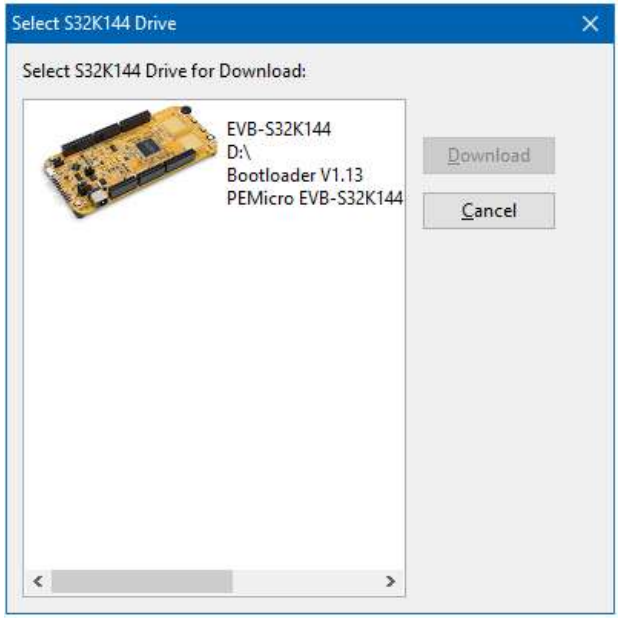

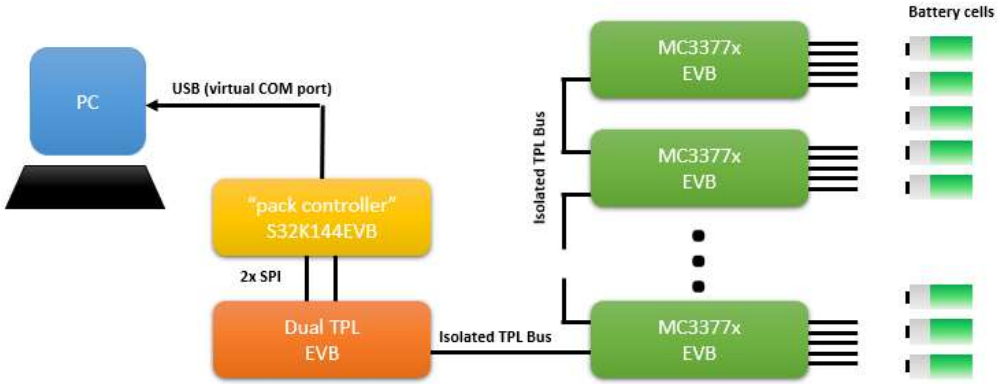

Battery Cell Controller rev C – Analog Expert SW Driver

Function Name	Description
BCC_Init	Initializes the Battery Cell Controller device or devices (depends on configuration). It Assigns CID, initializes communication interface according to selected mode (classic SPI or TPL) and configures the device with predefined values from Processor Expert properties.
BCC_Deinit	Deinitializes the components used by Battery Cell Controller component. Note that this method does not reset the device.
BCC_WriteRegister	This method writes a value to addressed register of selected Battery Cell Controller device.
BCC_WriteGlobalRegister	This method writes a value to addressed register of all configured Battery Cell Controller devices. This method is available when communication mode is TPL.
BCC_ReadRegisters	This method reads a value from addressed register of selected Batter Cell Controller device.
BCC_Sleep	Set sleep mode of all Battery Cell Controller devices. MC33664 goes to sleep mode automatically.
BCC_WakeUp	Sets normal mode of all Battery Cell Controller devices. MC33664 goes to normal automatically.
BCC_StartConversion	Starts ADC conversion. It sets Start of Conversion bit and new value of TAG ID in ADC_CFG register. This TAG ID is increment for each conversion. You can use method IsConverting to check conversion status.
BCC_IsConverting	Checks status of conversion defined by End of Conversion bit in ADC_CFG register.
BCC_GetRawMeasurements	Reads the measurement registers and returns raw values. You can use macros defined in header file to perform correct unit conversion.
BCC_GetAverageCurrent	Converts average current with use of the Coulomb counter. Resolution of the Coulomb counter depends on settings of BCC (see "Action Read Current" property).
BCC_GetStatus	Reads status registers and returns raw values. List of read registers: CELL_OV_FLT, CELL_UV_FLT, CB_OPEN_FLT, CB_SHORT_FLT, CB_DRV_STATUS, GPIO_STS, AN_OT_UT_FLT, GPIO_SHORT_Anx_OPEN_STS, I_STATUS, PGA DAC, COM_STATUS, FAULT1_STATUS, FAULT2_STATUS, FAULT3_STATUS.
BCC_RunDiagnostic	Call internal diagnostic functions.
BCC_SoftwareReset	Resets Battery Cell Controller device using software reset. It enters reset via SPI or TPL interface.
BCC_HardwareReset	Resets Battery Cell Controller device using software reset. It enters reset via RESET pin. This method is available when RESET pin is enabled in properties ("Reset pin" set to Enabled).
BCC_SetGPIOOutput	Sets output value of Batter Cell Controller GPIO pin. This method is available when at least one GPIO is in output mode.
BCC_SetCBDrivers	Sets state of cell balancing drivers. It is designated to control all the drivers at once.
BCC_GetNtcCelsius	This method calculates temperature from raw value of MEAS_ANx register. You can use method GetRawMeasurements to get values of measurement registers. It uses precomputed values stored in BCC_NTC_TABLE table.

Analog expert SW driver details:

- Tools chain supported
  - S32 DS 2018.R1
  - S32 SDK EAR 3.0.0
- S32K144 Project examples
  - BCC14
  - TPL communication
  - Diagnostics / Measurements
  - Freemaster 2.0

Supported HW:

- S32K144EVB-Q100
- FRDM33664BEVB
- RD33771CDSTEVB

Documentation:

- SW User's Guide and readme file
- Programmers' guide

Evaluation platform – distributed system

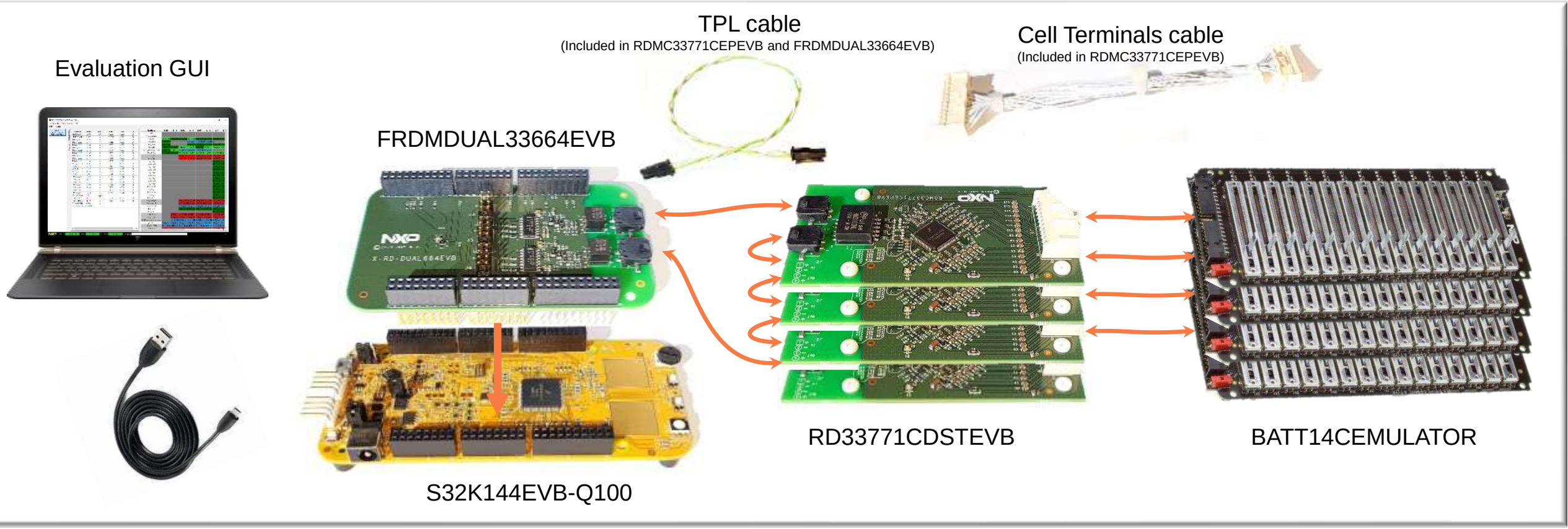

SW TOOLS :

- MC33771C software driver for 32-bit Microcontrollers
- Evaluation GUI for Windows PC to connect to S32K144EVB

Evaluation platform – centralized system

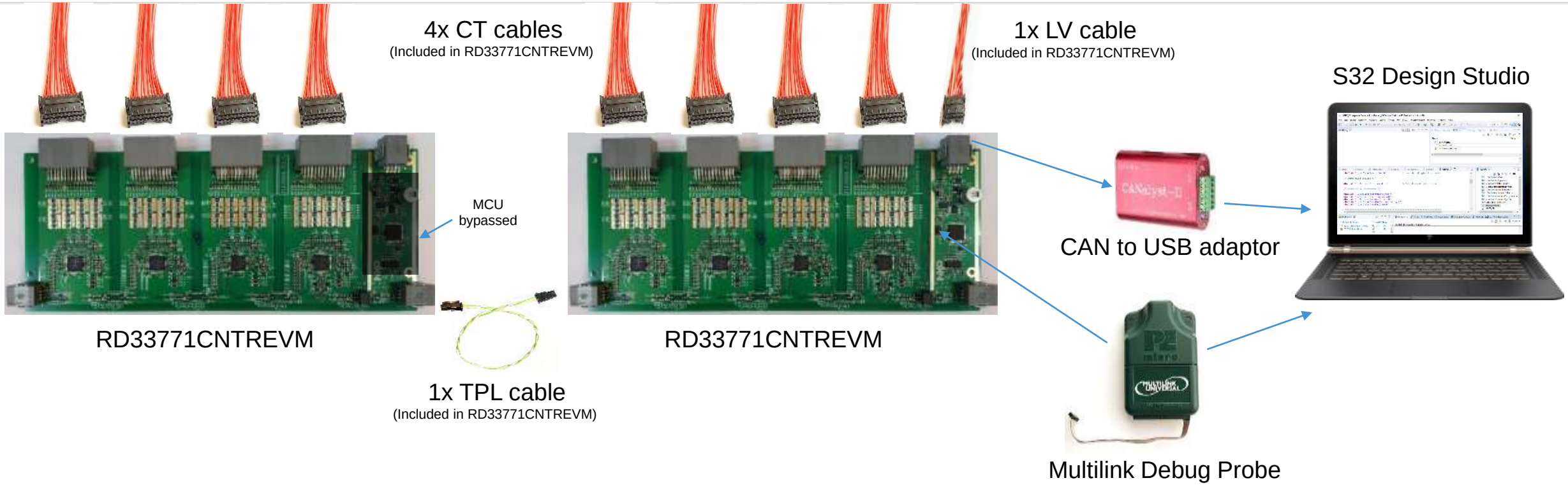

SW TOOLS :

- MC33771C software driver for 16-bit or 32-bit Microcontrollers (ARM, PPC or S12 core)
- CAN protocol documentation
- S32 Design Studio

MPC5777C-DEVB

Low-Cost, Standalone, Development Board for NXP's SPC5777C, FS65xx and TJA11xx Family of Products

- The MPC5777C-DEVB board includes a complete NXP system solution with the highly integrated SPC5777C MCU as well as the advanced MC33FS6520LAE system basis chip and the TJA1100 and TJA1145T/FD Ethernet and CAN FD PHYs.
- These products offer the system performance, safety and security needed for a range of applications from traction motors and battery management systems (BMS) to internal combustion engines and transmissions.
- MC33FS6520LAE is providing robust, scalable power management to the SPC5777C MCU with Fail Silent safety monitoring measures that fit for ASIL D. Software Library is available to ease Design integration as 1 HW + SW solution.
- The SPC5777C offers 264MHz lockstep cores to support ASIL-D, 8 MB of Flash, CAN-FD, Ethernet, advanced complex timers and a CSE hardware security module.

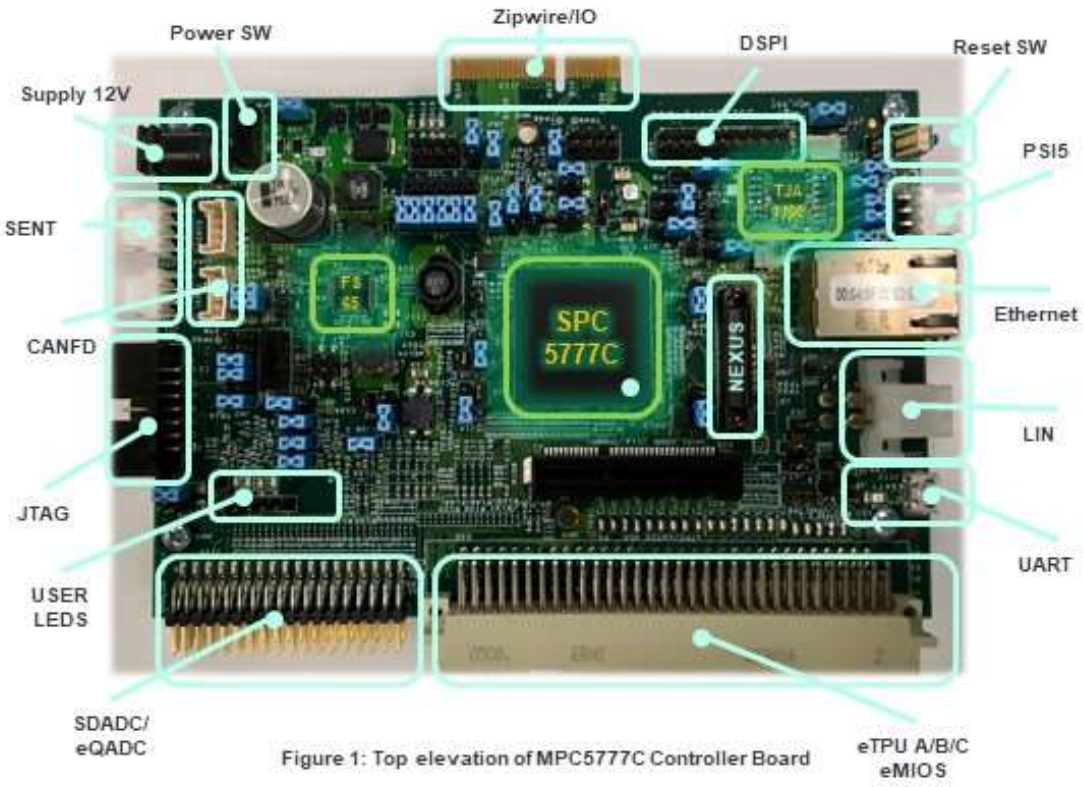

Figure 1: Top elevation of MPC5777C Controller Board

MPC5777C-DEVB

Low-Cost, Standalone, Development Board for NXP's SPC5777C, FS65xx and TJA11xx Family of Products

- The MPC5777C-DEVB has the benefits over the existing motherboard + daughterboard in that it is significantly less expensive ($279 SRP vs $734), offers a smaller form factor and includes more interfaces for development and debug.
- The MPC5777C-DEVB will include a User Guide for fast start up and support of Lauterbach, P&E Multilink and GreenHills tools as debuggers.
- MPC5777C-DEVB available for online ordering.
- MSRP $279

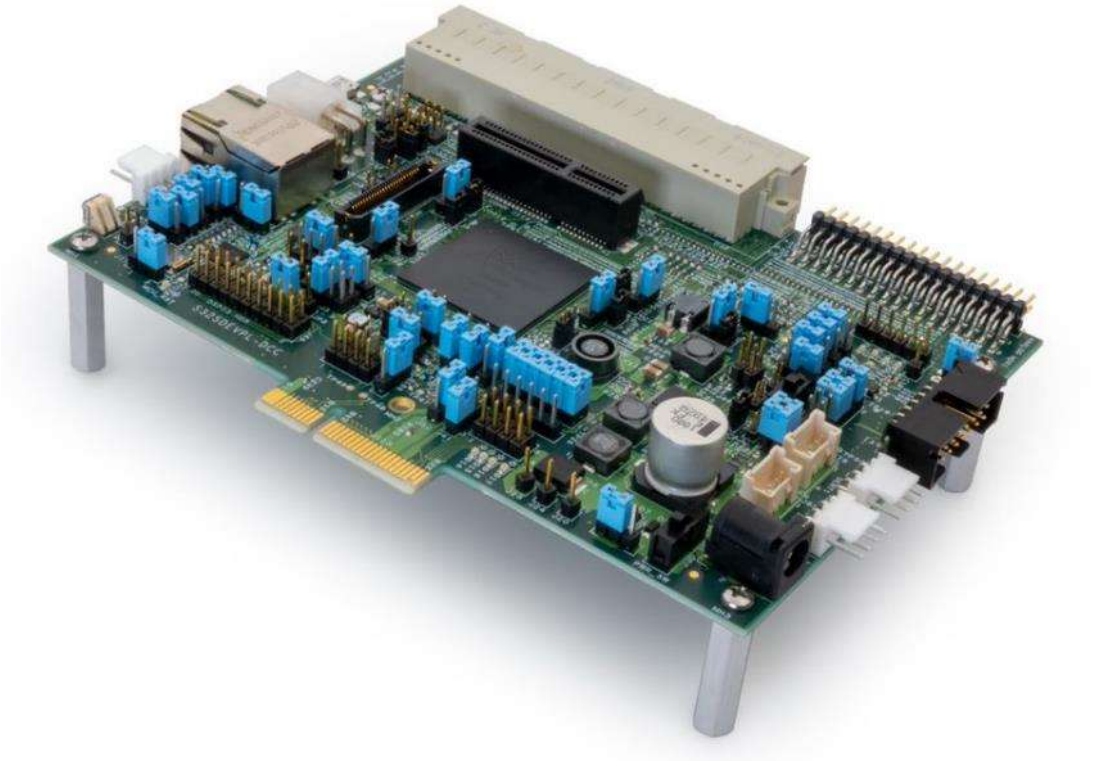

Toulouse BMS laboratory certification

BMS System Validation Lab

BCI Testing

- Faraday Chamber
- 1 EMC Technician
- **IEC 63132-3**

ISO Pulse

- ISO Pulse standard
- ISO 7637, ISO 16750, LV 124, LV 148

Use Cases

- Daisy Chain
- State Machine
- Tests in Temperature

Fault Injection

- Battery Emulator + NI PXI
- Automatic bench
- in line with ISO26262 norm

Hotplug set-up

- Battery terminals plugged randomly

BMS IC Validation EMC Lab

Conducted,
Direct Pin Injection
method
IEC 62132-4 Immunity

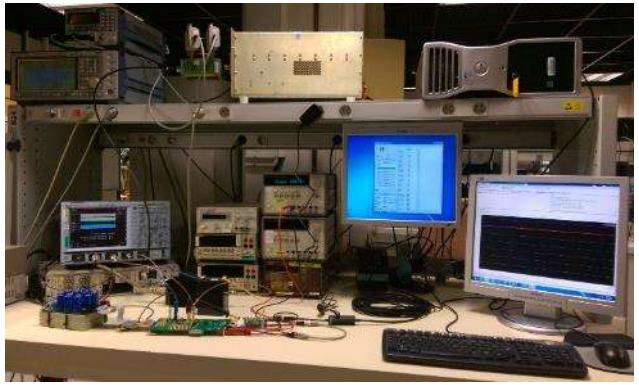

Conducted Emission,
1Ω/150Ω direct coupling
method
IEC 61967-4

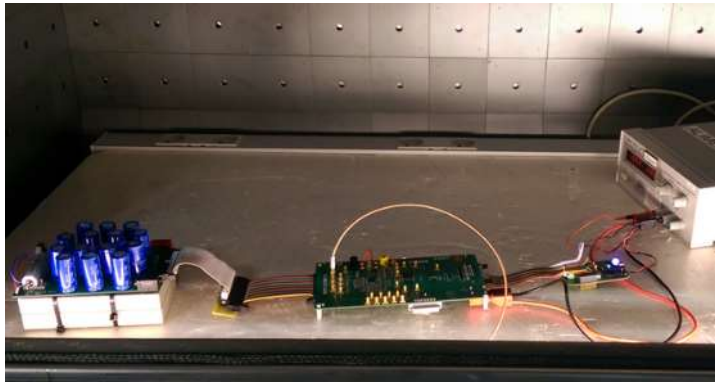

Radiated Immunity,
TEM-cell method
IEC 62132-2

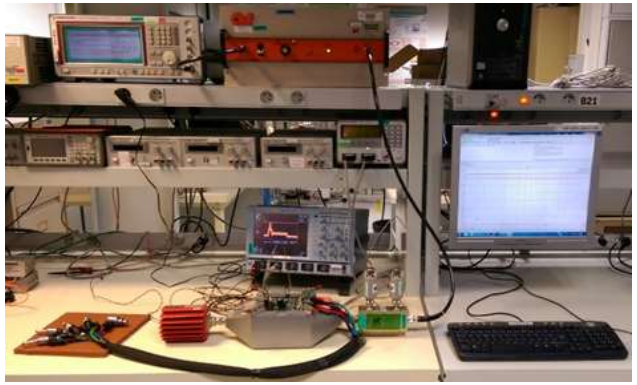

Radiated Emission,
TEM-cell method
IEC 61967-2

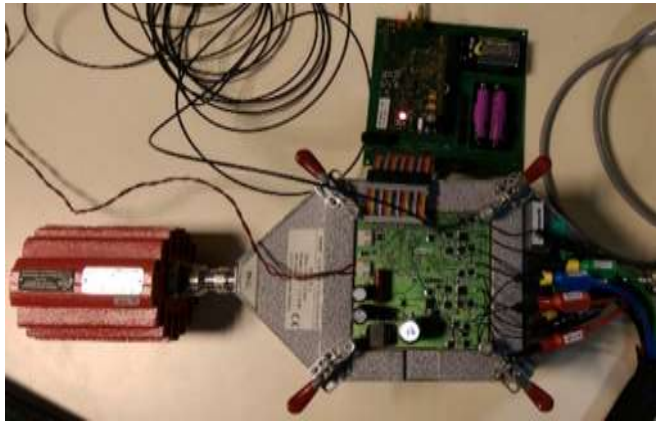

Radiated Immunity,
Bulk Current Injection
method
IEC 62132-3

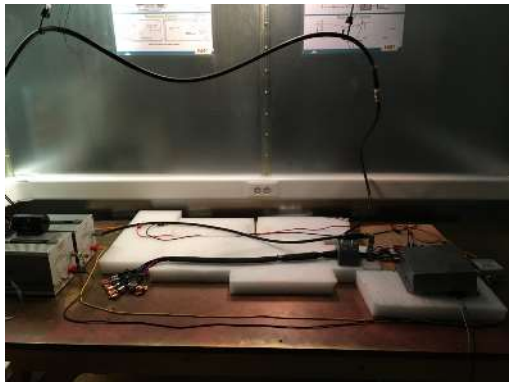

Radiated Emission,
TL 81000
<u>External</u> TLS Labs

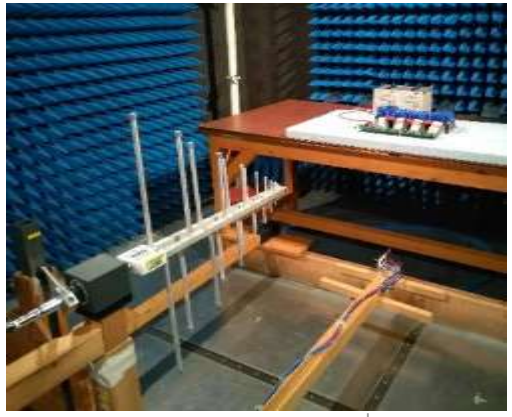

Safety Power Management for ASIL-C/D applications

MC33FS45xx, MC33FS65xx

MC35FS45xx, MC33FS65xx

Role of the Safety Power Supply in a Fail Silent System

Main tasks

- Deliver safety related supply rail(s) to the MCU and other peripherals of a safety system
- Monitor safety related supply rails for OV and UV (Detection)
- Request for a system degradation in case of fault in the Fault Tolerant Time (Safe State)

Additional safety mechanisms to facilitate system integration

Challenger WD

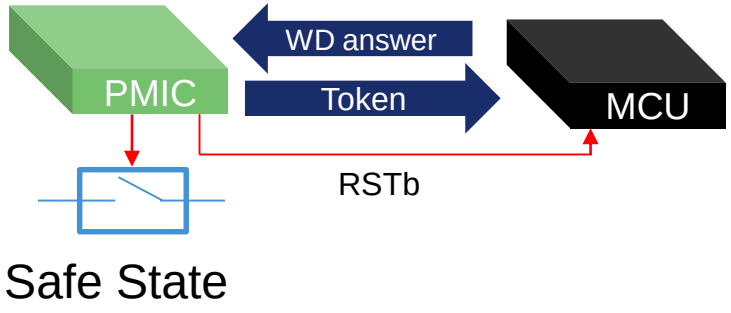

HW fault monitoring

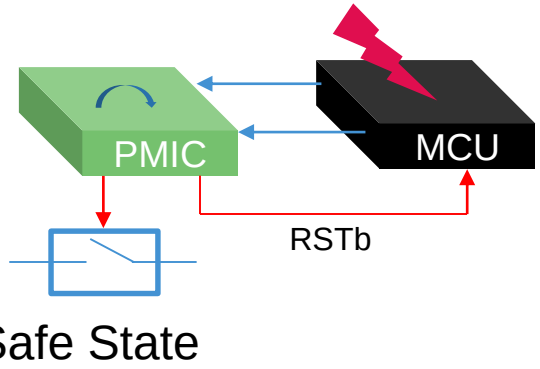

SOC HW failure monitoring

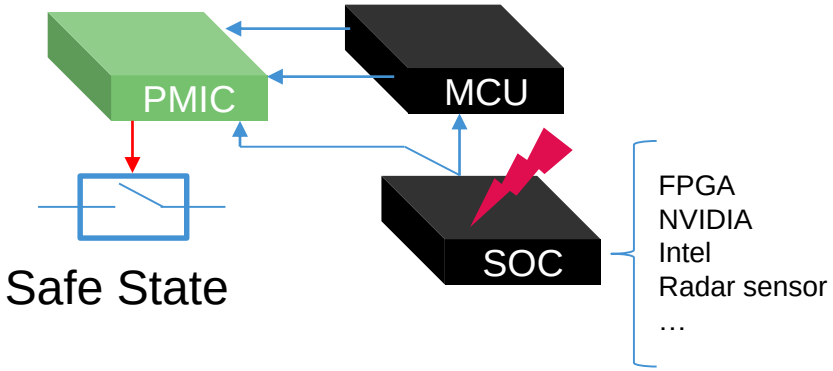

Safety Power Management – Attach With MPC57xx

Powertrain Electrification Safety Power Management

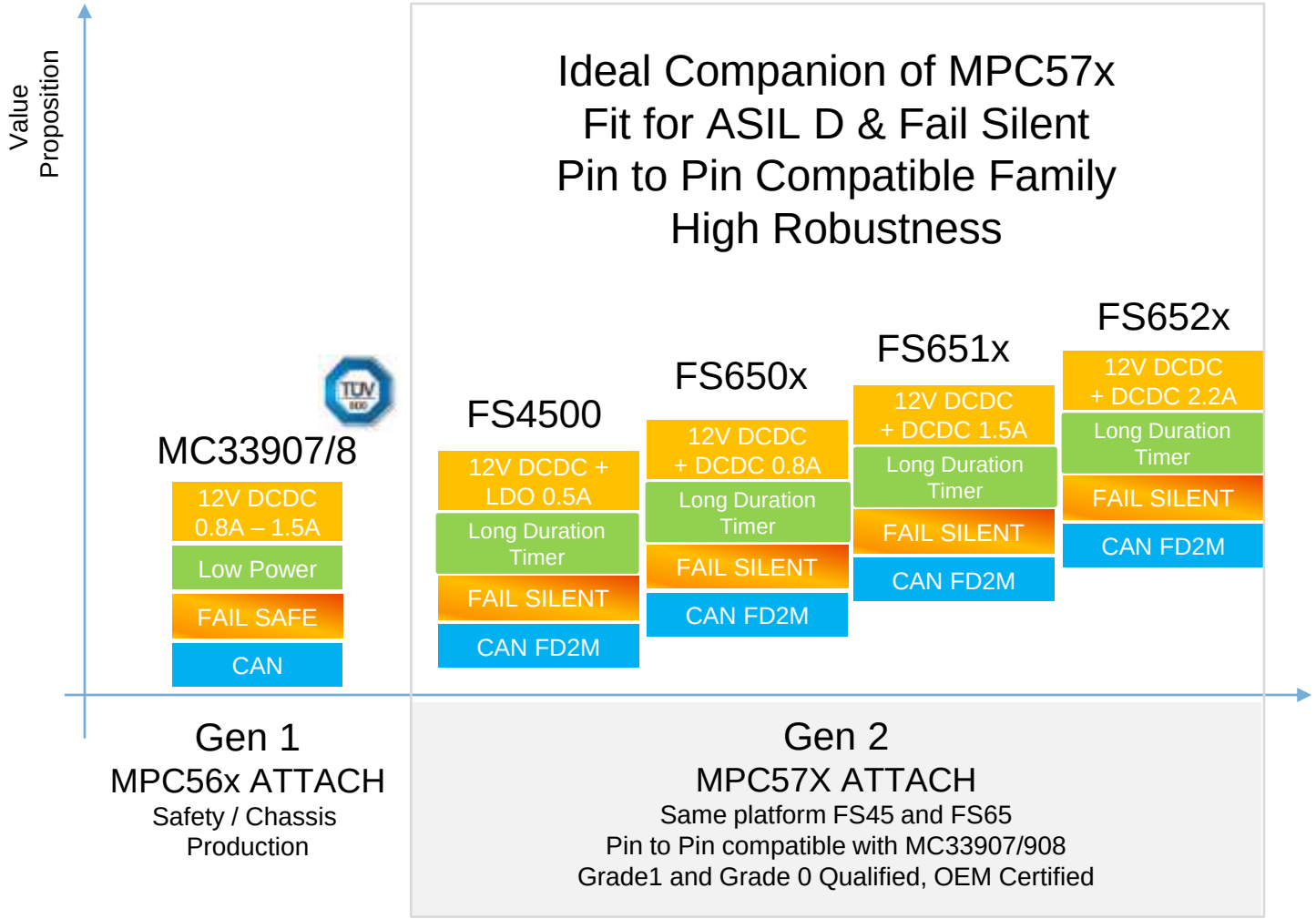

Secured & Safe System Solutions

- ISO 26262 architecture (TUV SUD proven)
- Functional robustness (non ISO pulse, EMC, HTOL)
- Security (SM transition and Power Gate)

High Efficient Solutions

- Target 12 V, 24 V, 48 V (application note)
- DCDC & LDO architecture (Vpre + Vcore)
- Ultra low power modes (low Iq, long dur. timer)

Safety Simplified Solutions

- ISO 26262 ready documentation
- System validation test (eFAST)
- Global ecosystem (incl HW & SW)

FS45/65 Solution for BMS: System Added Values

Enabling ASIL D Fail Silent Operations, Simplify Design and Reduce System Cost

✓ Fit for ASIL-D applications

- SPM>90%, LT>99%, PHMF<10-8
- Analog & Digital Safety Mechanisms to fit for ASILD
- All safety mechanism reaction are < FTTI < 10ms

✓ Long duration timer

- Internal SBC Counter from few sec to 6 months
- Active in Run and Low Power Operations
- Measure time during Parking Mode (Low Power)
- Measure time during BMS Operation (Run)
- Optional Cyclic Wake Up (every week)

✓ Fail silent mode

- Optional reset at safe state to enable MCU Diag
- Configurable safe state, independently for each failure
- System availability: No MCU shutdown after multiple failures
- Smart degraded mode: safe and available operation

✓ Redundant fail safe pin (FS0B & FS1B)

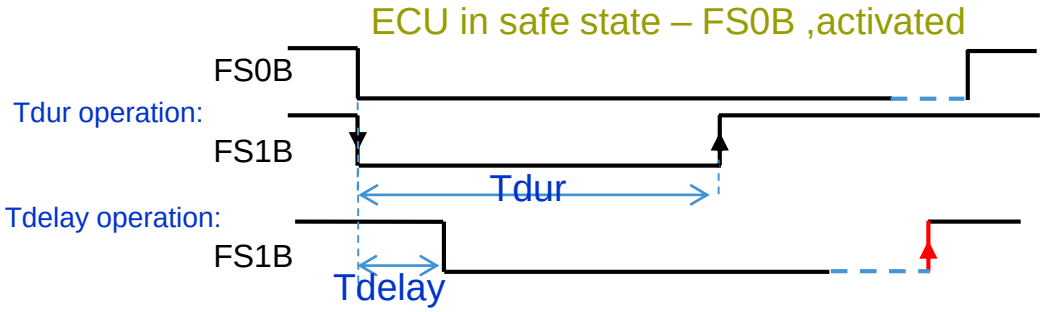

- T duration operation: Inhibit CAN during Tdur duration
- T delay operation: Safe delay of BMS load desactivation

Conclusion

Summary

NXP Solutions are designed to:

- Address main BMS applications with scalable SW/HW compatible solutions
  - Optimized feature set for 48V & 14V Li-ion BMS
  - Efficient solutions supporting different High Voltage Battery topologies
- Leverage System solution (MCU, SBC, BMS) and Functional Safety
- Provide unique capabilities
  - Highest cell voltage accuracy: 0.8mV
  - Integrated current sense
  - Integrated 300mA Cell Balancing
  - Automotive quality and longevity

SECURE CONNECTIONS
FOR A SMARTER WORLD

www.nxp.com

Microcontrollers for BMS

Automotive MCU Solutions for Battery Management Systems (BMS) and HEV/EV Inverter Applications

MPC5775B and MPC5775E

- To better address the growing HEV/EV market NXP Auto MCUs developed the MPC5775B and MPC5775E
- These MCUs will offer the performance, safety and security needed for Battery Management Systems (BMS) and Electric Vehicle Inverter applications.
- Both MCUs offer lockstep cores to support ASIL-D, 4 MB of Flash, CAN-FD and CSE security module.
- The MPC5775B is targeted for BMS applications
- The MPC5775E is targeted for Inverters with the inclusion of complex motor control timers (eTPU) and higher core performance
- 100% compatible and scalable to MPC5777C for higher memory and performance
- The MPC5775B and MPC5775E are qualified now and ready for production

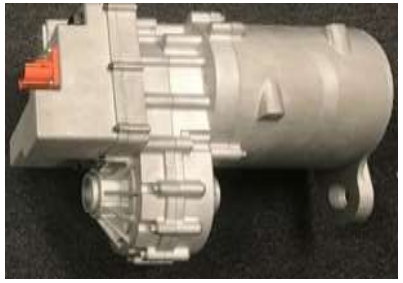

SPC5775B Safe & Secure BMS MCU

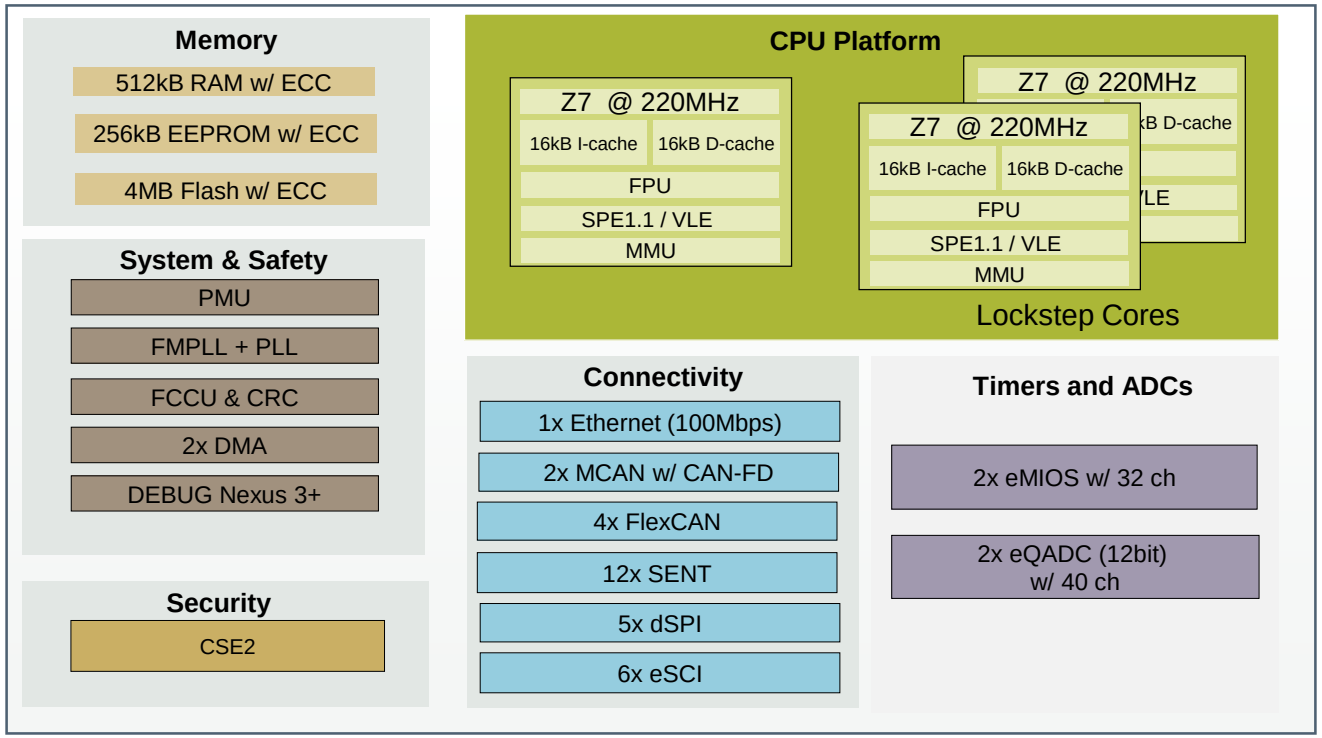

Specifications:

- **CPU:** 2 x Z7 220 MHz in LS & 1x Z7 220 MHz
- **Memory:** 4 MB Flash, 512 KB RAM, 256 KB EEPROM, all with ECC
- **Analog:** 2 x eQADC
- **Package:** 416 MAPBGA (27 x 27 mm^2, 1mm pitch)
- **Temp Range (Ta):** -40 to 125°C (150°C Tj), AEC-Q100 Grade 1

Benefits:

- **Functional Safety:** as per ISO 26262 with target ASIL D: Lock step cores, ECC, temperature and voltage sensors, clock monitoring, Fault Collection Unit.
- **Security:** Hardware module (CSE) with encryption/decryption, secure boot and key storage. Security firmware pre-programmed onto devices to simplify production
- **Communication Peripherals:** CAN FD, Ethernet, SPI, LIN
- **SW Enablement:** AUTOSAR MCAL, S32 Design Studio IDE support

SPC5775E Safe & Secure Inverter MCU

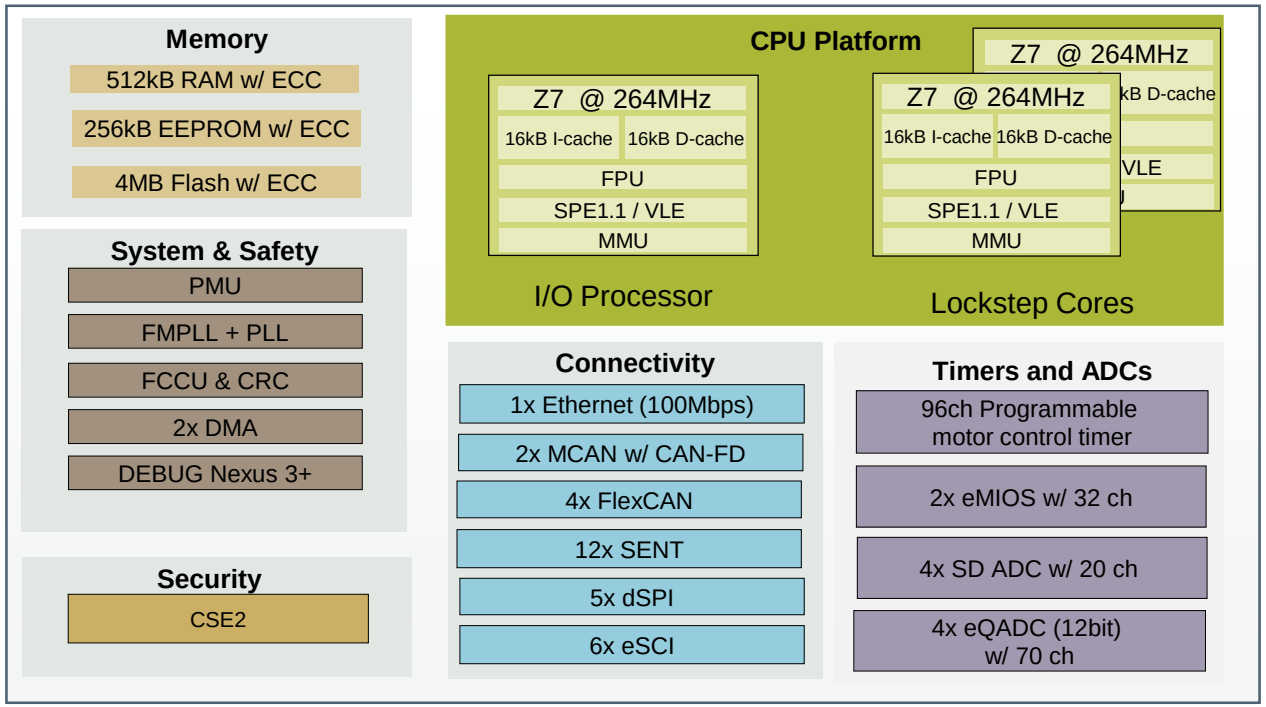

Specifications:

- **CPU:** 2 x Z7 264 MHz in LS & 1 x Z7 264 MHz
- **Memory:** 4 MB Flash, 512 KB RAM, 256 KB EEPROM, all with ECC
- **Analog:** 4 x eQADC, 4 x SD ADC
- **Package:** 416 MAPBGA (27x27 mm^2, 1 mm pitch)
- **Temp Range (Ta):** -40 to 125°C (150°C Tj), AEC-Q100 Grade 1

Benefits:

- **Traction Motor Control:** High performance cores with advanced programmable motor control timer and analog modules
- **Resolver Interface:** Managed through SD ADC, motor control timer and software without expensive external dedicated device.
- **Functional Safety:** as per ISO 26262 with target ASIL D: Lock step cores, ECC, temperature and voltage sensors, clock monitoring, Fault Collection Unit.
- **Security:** Hardware module (CSE) with encryption/decryption, secure boot and key storage. Security firmware pre-programmed onto devices to simplify production
- **Communication Peripherals:** CAN FD, Ethernet, SPI, LIN
- **SW Enablement:** SW for resolver interface, AUTOSAR MCAL, S32 Design Studio IDE support

SECURE CONNECTIONS
FOR A SMARTER WORLD

www.nxp.com