PCIe Interface

K7 FPGA TO T4241 PROCESSOR
x2 PCIe INTERFACE

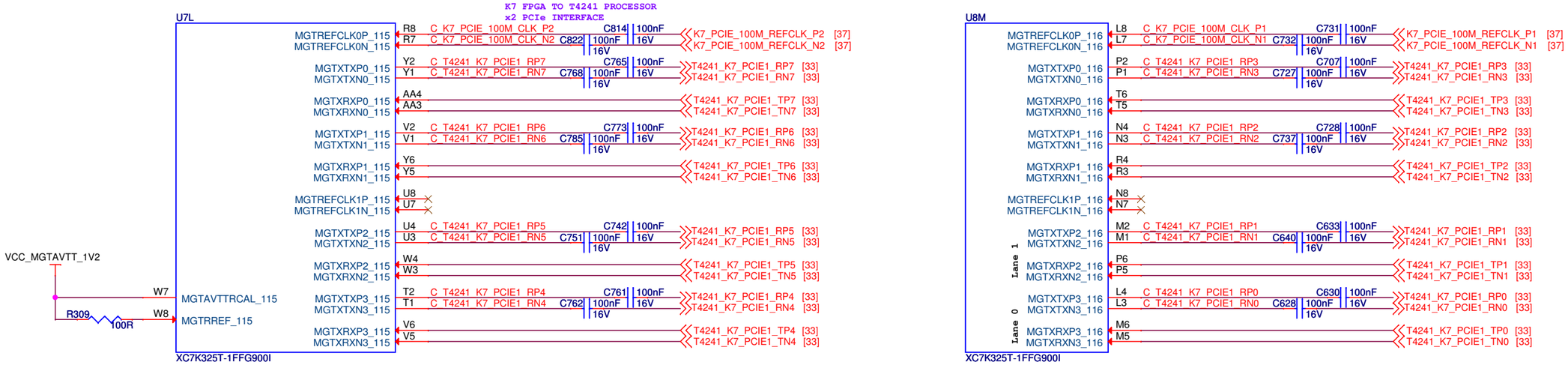

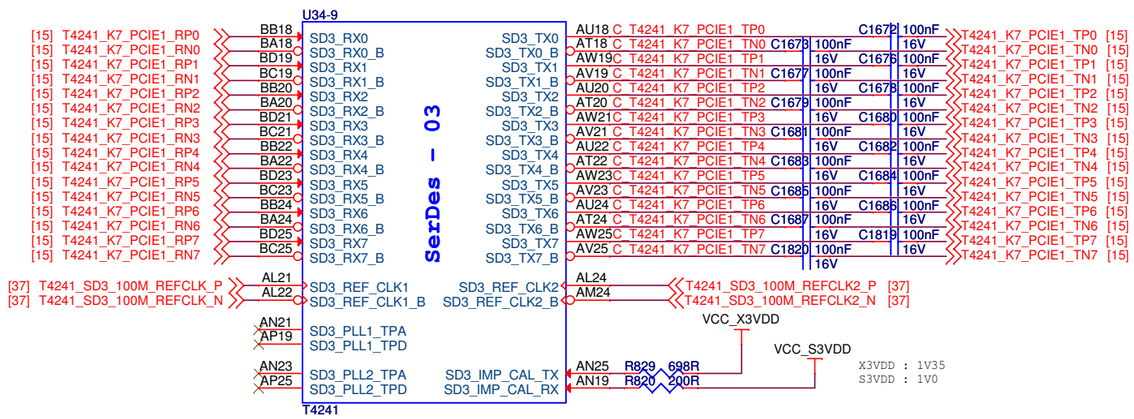

Title	n bv m	
Size A3	Document Number <Doc>	Rev <RevCode>
Date: Thursday, January 06, 2022	Sheet 1 of 1	