One Tone Load Pull Simulation with input power sweep; output power and PAE found at each fundamental or harmonic load

Load_Pull_Instrument_PSweep1_r1
X1
V_Bias1=2.855 V
V_Bias2=3.3 V
RF_Freq=100 MHz
Pavs_dBm_Start1=1
Pavs_dBm_Stop1=10
Pavs_dBm_Step1=1
Pavs_dBm_Start2=11
Pavs_dBm_Stop2=20
Pavs_dBm_Step2=0.5
Z0=20+j*0
Specify_Load_Center_S=yes
Sweep_Rectangular_Region=no
Swept_Harmonic_Num=1
S_Load_Baseband=0*exp(j*0*pi)
S_Load_Center_Fund=0.3*exp(j*0.8*pi)

S_Load_Center_2nd=1*exp(j*0*pi)
S_Load_Center_3rd=1*exp(j*0*pi)
S_Load_Radius=0.55
Num_Points=100
Z_Source_Fund=10+j*0
Z_Source_2nd=1000

Load Pull Instrument
w/ Source Power Sweep

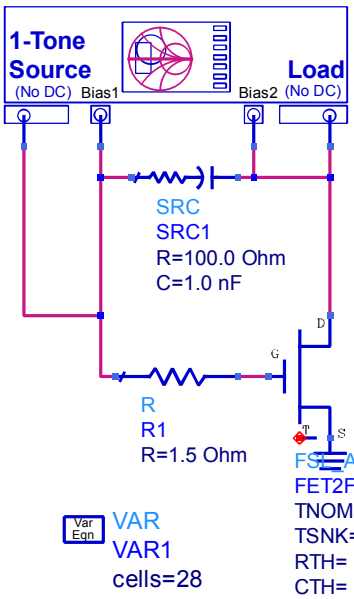

Push into instrument subcircuit to see or modify bias network, if necessary.

Note:
If the optimal load is near, for example, 5+j*10, you can make this the center of the Smith Chart by setting Z0=5-j*10. In this case, you would want to set S_Load_Center_Fund=0 or (if Specify_Load_Center_S=0) Z_Load_Center_Fund=5+j*10. Setting Sweep_Rectangular_Region=0 to specify sampling a circular region might be preferable in this case.

FSL_TECH_INCLUDE

FSL_AFT05MS003N_TECH_INCLUDE
FSL_AFT05MS003N_TECH_INCLUDE