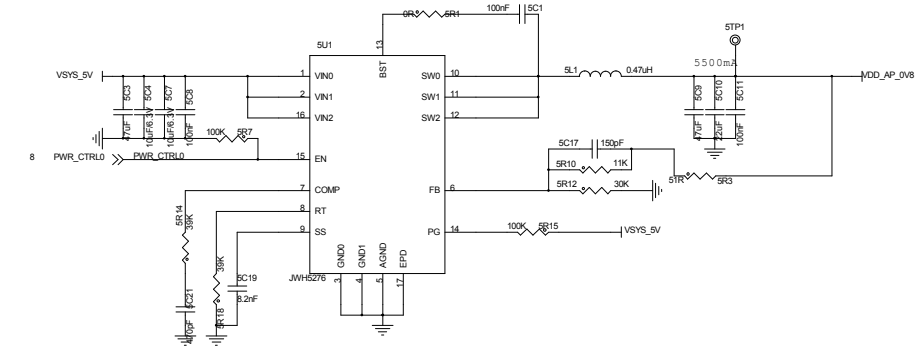

VDD_AP_0V82

IOUT = 6A

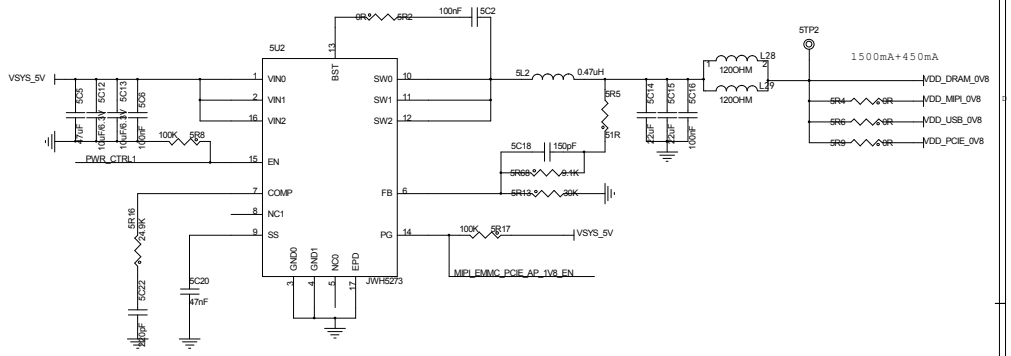

VDD_DRAM_0V82

IOUT = 3A

VDDA_AP_1V8 200mA

VDDA_ADC_1V8 25mA

VDDA_DRAM_1V8 25mA

VDDA_MIPI_1V8 50mA

VDDA_PCIE_1V8 50mA

VDDA_LVDS_1V8 400mA

VDDL_EMMC_1V8 200mA

VDDL_AP_1V8 50mA

total 250mA

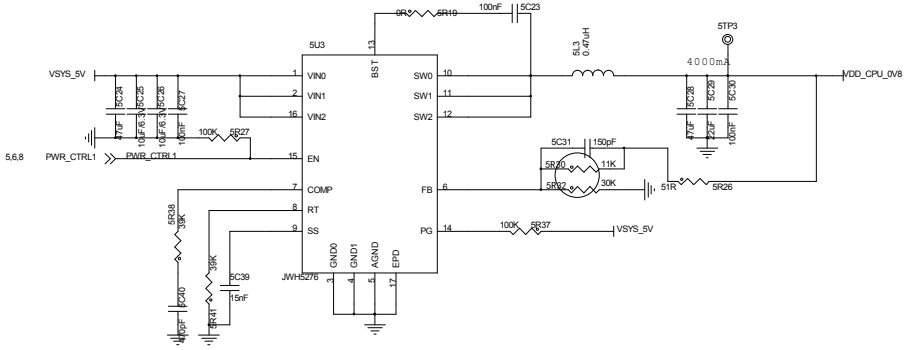

VDD_CPU_0V82

IOUT = 6A

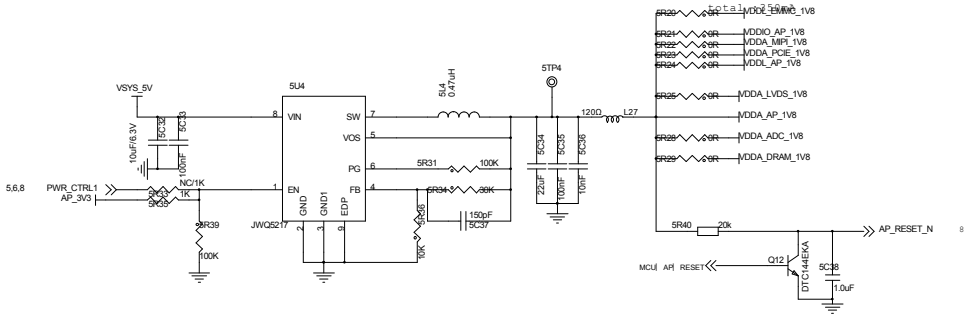

VDD_DRAM_0V8

IOUT = 2A

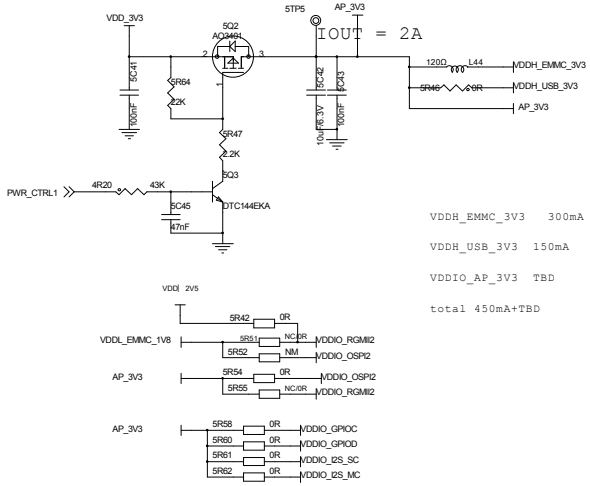

VDDH_EMMC_3V3 300mA

VDDH_USB_3V3 150mA

VDDIO_AP_3V3 TBD

total 450mA+TBD

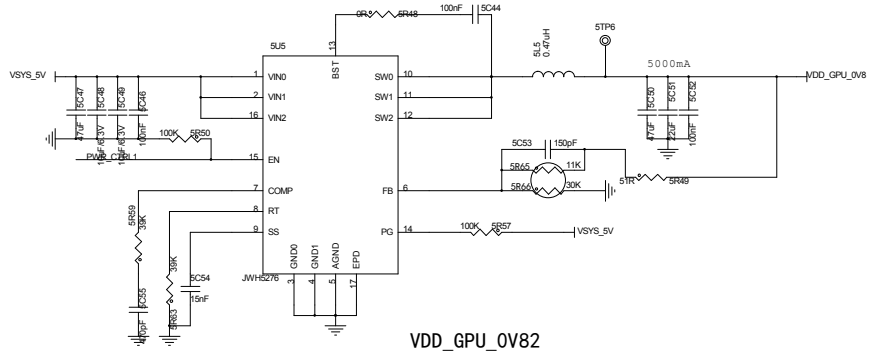

VDD_GPU_0V82

IOUT = 6A

Title	COOKOO
	AT202-DB
Size C	Document Number 05 AP PMB
Rev	V01
Date:	Monday, November 21, 2022
Sheet	5 of 26

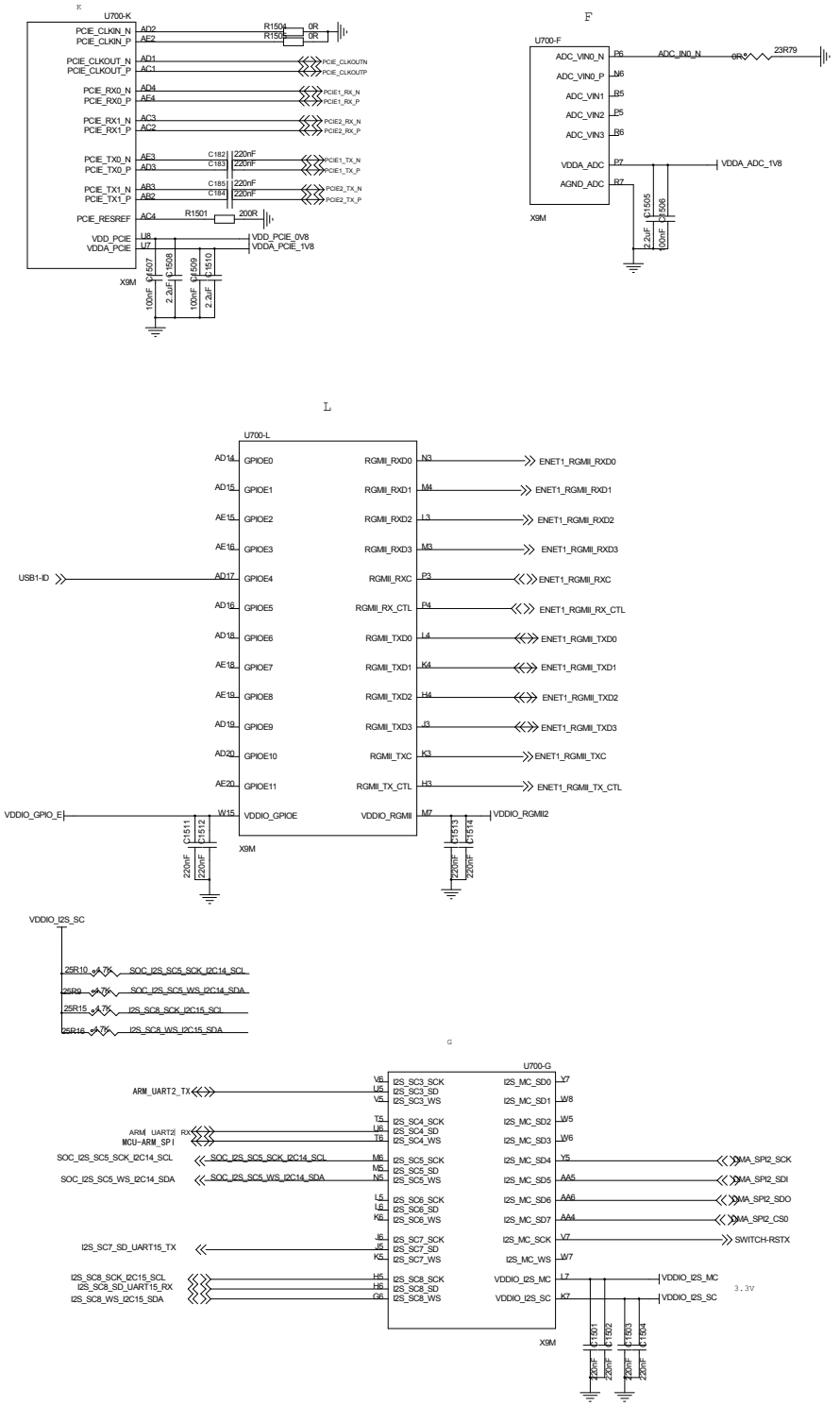

Title	COOKOO		
	AT202-DB		
Size C	Document Number 10 USB		Rev V01
Date: Monday, November 21, 2022	Sheet 15 of 26		

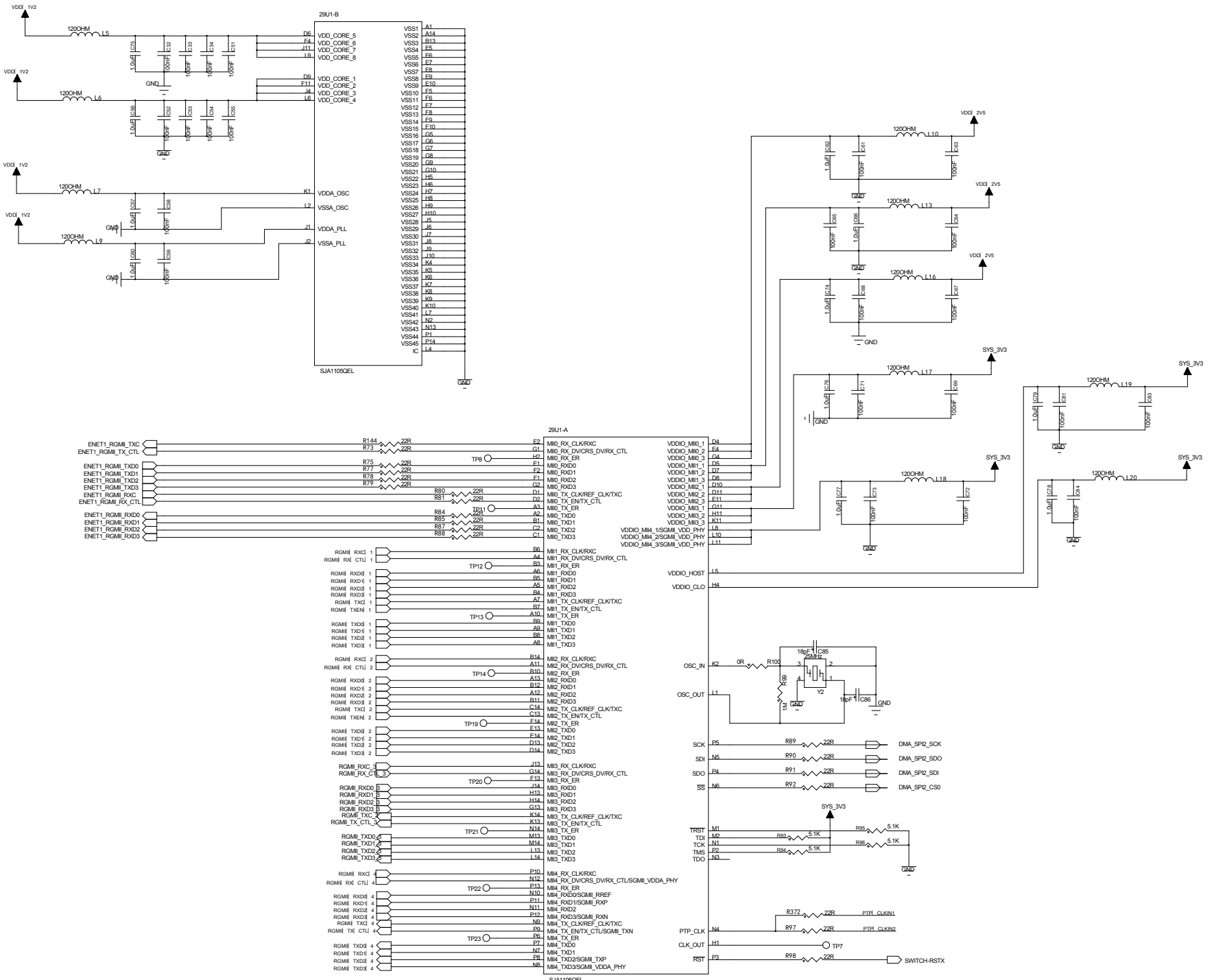

Title	
Size C	Document Number
Rev ?	
Date: Tuesday, February 28, 2023	Sheet 19 of 26

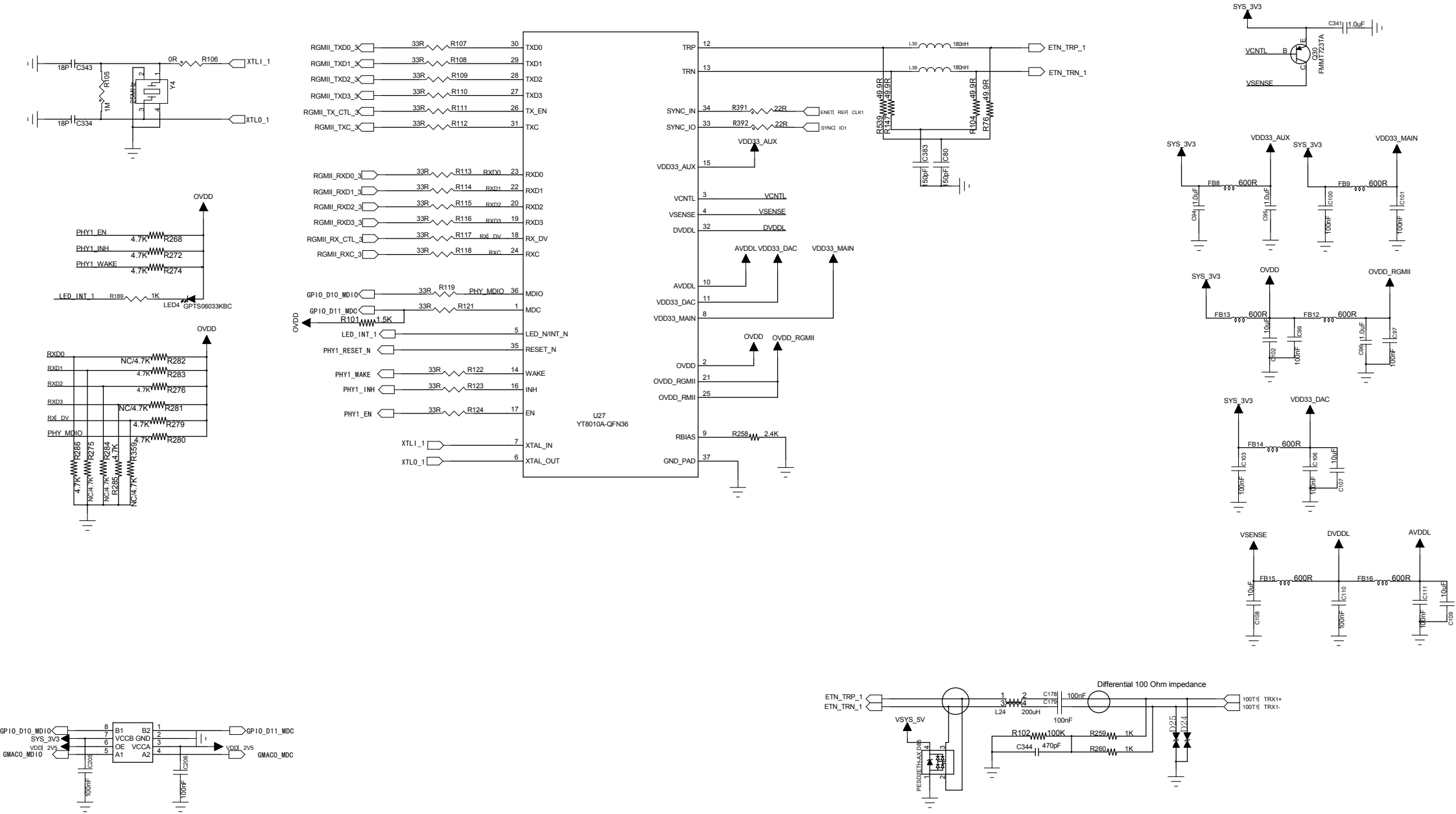
U27
YT8010A-QFN36
TXD0
TXD1
TXD2
TXD3
TX_EN
TXC
RXD0
RXD1
RXD2
RXD3
RX_DV
RXC
MDIO
MDC
LED_N/INT_N
RESET_N
WAKE
INH
EN
XTAL_IN
XTAL_OUT
TRP
TRN
SYNC_IN
SYNC_IO
VDD33_AUX
VCNTL
VSENSE
DVDDL
AVDDL
VDD33_DAC
VDD33_MAIN
OVDD
OVDD_RGMII
OVDD_RMII
RBIAS
GND_PAD
ETN_TRP_1
ETN_TRN_1
XTLI_1
XTLO_1
SYS_3V3
VDD33_MAIN
OVDD_RGMII
VSENSE
DVDDL
AVDDL
Differential 100 Ohm impedance
GPIO_D10_MDIO
GPIO_D11_MDC
GMAC0_MDIO
GMAC0_MDC

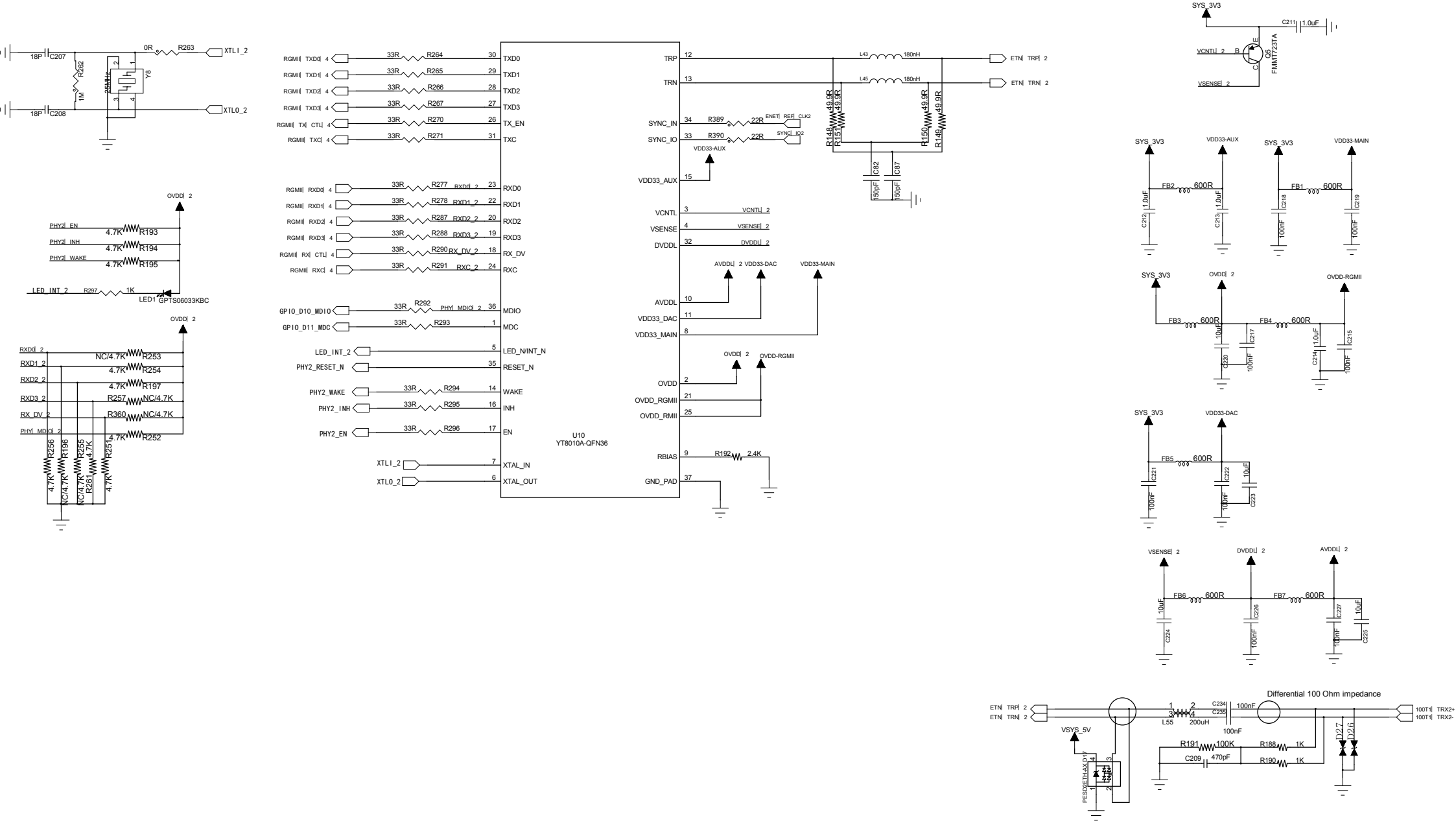
XTLI_2
XTLO_2
18P C207
18P C208
R262 1M
25MHz Y8
0R R263
OVDD_2
PHY2_EN 4.7K R193
PHY2_INH 4.7K R194
PHY2_WAKE 4.7K R195
LED_INT_2 R297 1K
LED1 GPTS06033KBC
RXD0_2 NC/4.7K R253
RXD1_2 4.7K R254
RXD2_2 4.7K R197
RXD3_2 R257 NC/4.7K
RX_DV_2 R360 NC/4.7K
PHY_MDIO_2 4.7K R252
R256 4.7K
R196 NC/4.7K
R255 4.7K
R261 NC/4.7K
R251 4.7K
RGMII_TXD0_4 33R R264 30 TXD0
RGMII_TXD1_4 33R R265 29 TXD1
RGMII_TXD2_4 33R R266 28 TXD2
RGMII_TXD3_4 33R R267 27 TXD3
RGMII_TX_CTL_4 33R R270 26 TX_EN
RGMII_TXC_4 33R R271 31 TXC
RGMII_RXD0_4 33R R277 RXD0_2 23 RXD0
RGMII_RXD1_4 33R R278 RXD1_2 22 RXD1
RGMII_RXD2_4 33R R287 RXD2_2 20 RXD2
RGMII_RXD3_4 33R R288 RXD3_2 19 RXD3
RGMII_RX_CTL_4 33R R290 RX_DV_2 18 RX_DV
RGMII_RXC_4 33R R291 RXC_2 24 RXC
GPIO_D10_MDIO 33R R292 PHY_MDIO_2 36 MDIO
GPIO_D11_MDC 33R R293 1 MDC
LED_INT_2 5 LED_N/INT_N
PHY2_RESET_N 35 RESET_N
PHY2_WAKE 33R R294 14 WAKE
PHY2_INH 33R R295 16 INH
PHY2_EN 33R R296 17 EN
XTLI_2 7 XTAL_IN
XTLO_2 6 XTAL_OUT
U10
YT8010A-QFN36
TRP 12
TRN 13
L43 180nH
L45 180nH
ETN_TRP_2
ETN_TRN_2
SYNC_IN 34 R389 22R ENET_REF_CLK2
SYNC_IO 33 R390 22R SYNC_IO2
VDD33-AUX
VDD33_AUX 15
R148 49.9R
R151 49.9R
R150 49.9R
R149 49.9R
C82 150pF
C87 150pF
VCNTL 3 VCNTL_2
VSENSE 4 VSENSE_2
DVDDL 32 DVDDL_2
AVDDL_2 VDD33-DAC VDD33-MAIN
AVDDL 10
VDD33_DAC 11
VDD33_MAIN 8
OVDD_2 OVDD-RGMII
OVDD 2
OVDD_RGMII 21
OVDD_RMII 25
RBIAS 9 R192 2.4K
GND_PAD 37
SYS_3V3
C211 1.0uF
VCNTL_2 B
VSENSE_2
Q5 FMMT723TA
VDD33-AUX
VDD33-MAIN
FB2 600R
FB1 600R
C212 1.0uF
C213 1.0uF
C218 100nF
C219 100nF
OVDD-RGMII
FB3 600R
FB4 600R
C220 10uF
C217 100nF
C234 1.0uF
C215 100nF
VDD33-DAC
FB5 600R
C221 100nF
C222 10uF
C223 100nF
VSENSE_2
DVDDL_2
AVDDL_2
FB6 600R
FB7 600R
C224 10uF
C226 100nF
C227 100nF
C225 10uF
Differential 100 Ohm impedance
ETN_TRP_2
ETN_TRN_2
100T1_TRX2+
100T1_TRX2-
L55 200uH
C234 100nF
C235 100nF
VSYS_5V
PESD2ETH-AX D17
R191 100K
R188 1K
C209 470pF
R190 1K
D227
D226

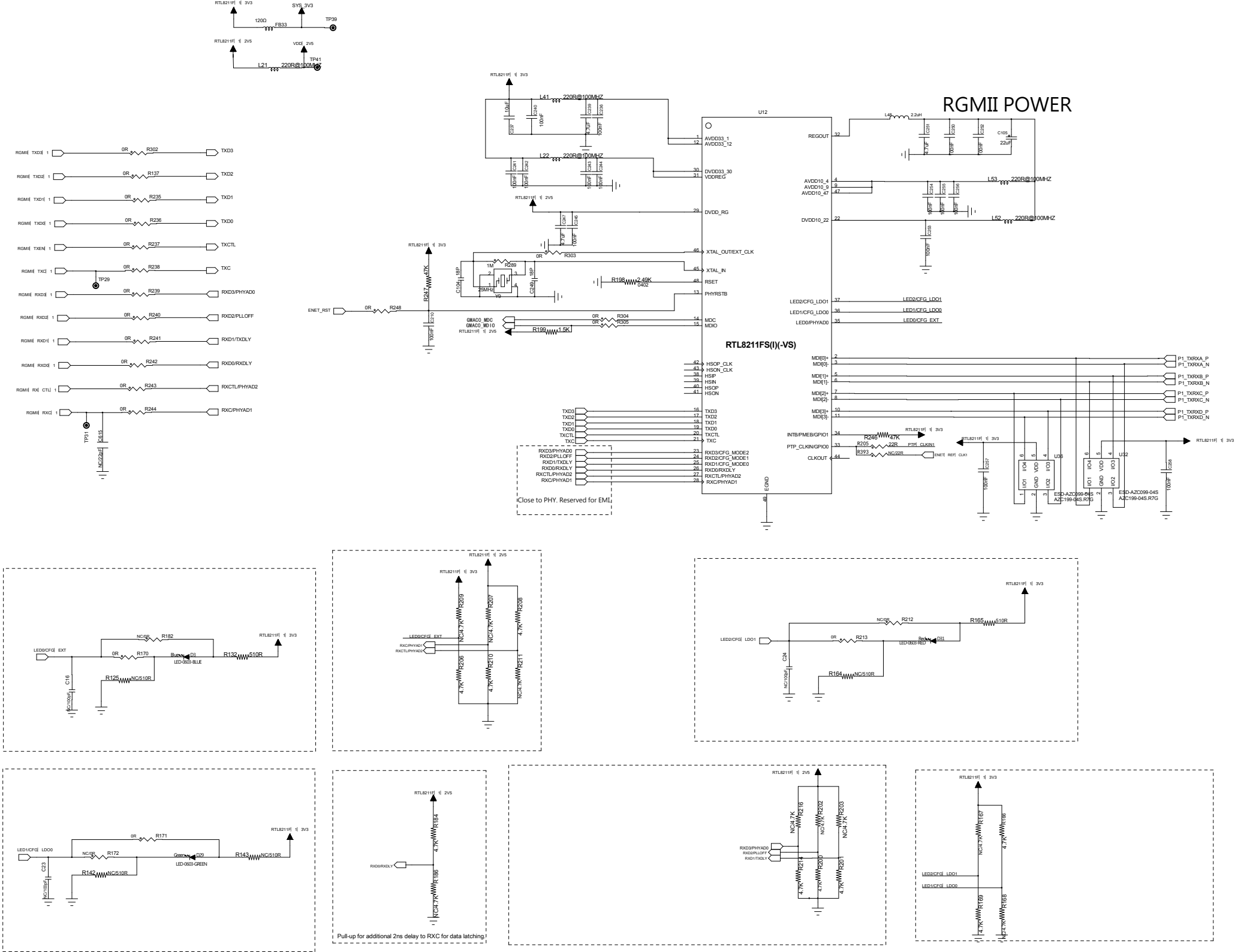
RGMII POWER
RTL8211FS(I)(-VS)
U12
TXD3
TXD2
TXD1
TXD0
TXCTL
TXC
RXD3/PHYAD0
RXD2/PLLOFF
RXD1/TXDLY
RXD0/RXDLY
RXCTL/PHYAD2
RXC/PHYAD1
ENET_RST
REGOUT
LED2/CFG_LDO1
LED1/CFG_LDO0
LED0/PHYAD0
LED2/CFG_LDO1
LED1/CFG_LDO0
LED0/CFG_EXT
INTB/PMEB/GPIO1
PTP_CLKIN/GPIO0
CLKOUT
P1_TXRXA_P
P1_TXRXA_N
P1_TXRXB_P
P1_TXRXB_N
P1_TXRXC_P
P1_TXRXC_N
P1_TXRXD_P
P1_TXRXD_N
ESD-AZC099-04S
AZC199-04S.R7G
Close to PHY. Reserved for EMI.
Pull-up for additional 2ns delay to RXC for data latching.

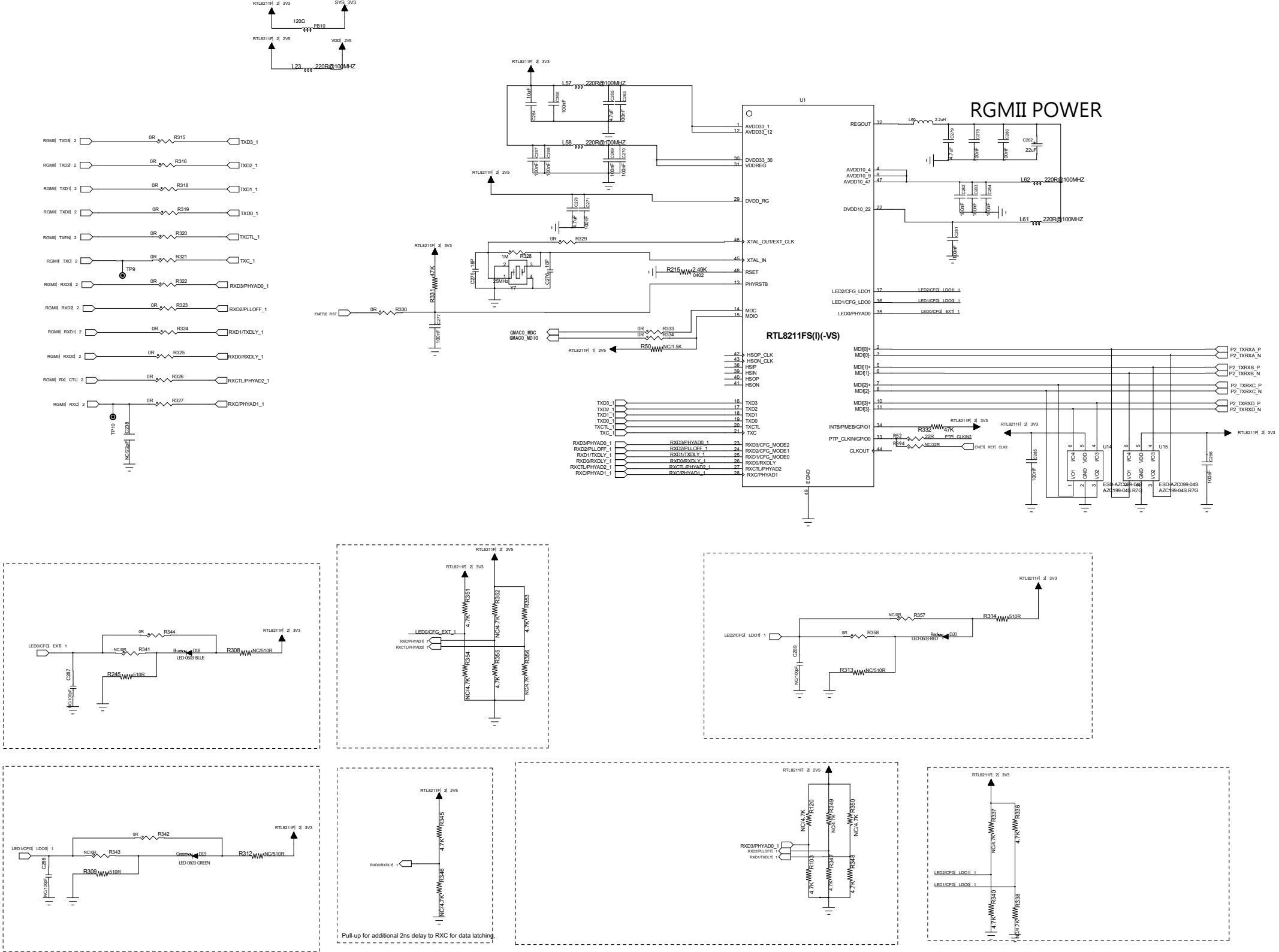
RGMII POWER
RTL8211FS(I)(-VS)
U1
RTL8211F 2 3V3
SYS_3V3
FB10
120Ω
RTL8211F 2 2V5
VDD 2V5
L23 220R@100MHZ
L57 220R@100MHZ
L58 220R@100MHZ
L62 220R@100MHZ
L61 220R@100MHZ
L60 2.2uH
C262 22uF
AVDD33_1
AVDD33_12
DVDD33_30
VDDREG
DVDD_RG
XTAL_OUT/EXT_CLK
XTAL_IN
RSET
PHYRSTB
MDC
MDIO
HSOP_CLK
HSON_CLK
HSP
HSIN
HSOP
HSON
EGND
REGOUT
AVDD10_4
AVDD10_9
AVDD10_47
DVDD10_22
LED2/CFG_LDO1
LED1/CFG_LDO0
LED0/PHYAD0
MDI[0]+
MDI[0]-
MDI[1]+
MDI[1]-
MDI[2]+
MDI[2]-
MDI[3]+
MDI[3]-
INTB/PMEB/GPIO1
PTP_CLKIN/GPIO0
CLKOUT
TXD3
TXD2
TXD1
TXD0
TXCTL
TXC
RXD3/CFG_MODE2
RXD2/CFG_MODE1
RXD1/CFG_MODE0
RXD0/RXDLY
RXCTL/PHYAD2
RXC/PHYAD1
P2_TXRXA_P
P2_TXRXA_N
P2_TXRXB_P
P2_TXRXB_N
P2_TXRXC_P
P2_TXRXC_N
P2_TXRXD_P
P2_TXRXD_N
ESD-AZC099-04S
AZC199-04S.R7G
GMAC0_MDC
GMAC0_MDIO
ENET2_RST
ENET1_REF_CLK2
PTP_CLKIN2
25MHz
Y7
TP9
TP10
RGMII_TXD3_2
RGMII_TXD2_2
RGMII_TXD1_2
RGMII_TXD0_2
RGMII_TXEN_2
RGMII_TXC_2
RGMII_RXD3_2
RGMII_RXD2_2
RGMII_RXD1_2
RGMII_RXD0_2
RGMII_RX_CTL_2
RGMII_RXC_2
TXD3_1
TXD2_1
TXD1_1
TXD0_1
TXCTL_1
TXC_1
RXD3/PHYAD0_1
RXD2/PLLOFF_1
RXD1/TXDLY_1
RXD0/RXDLY_1
RXCTL/PHYAD2_1
RXC/PHYAD1_1
LED0/CFG_EXT_1
LED2/CFG_LDO1_1
LED1/CFG_LDO0_1
LED0-0603-BLUE
LED0-0603-RED
LED0-0603-GREEN
Pull-up for additional 2ns delay to RXC for data latching.

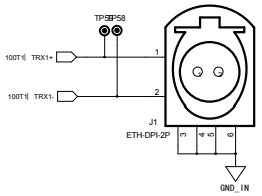
J1
ETH-DPI-2P
GND_IN

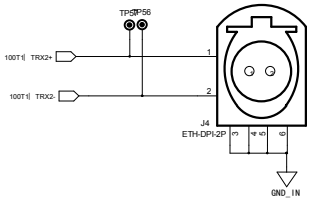
J4
ETH-DPI-2P
GND_IN

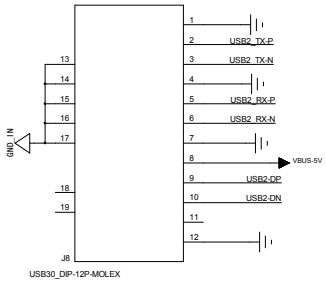
USB2_TX-P
USB2_TX-N
USB2_RX-P
USB2_RX-N
VBUS-5V
USB2-DP
USB2-DN
J8
USB30_DIP-12P-MOLEX

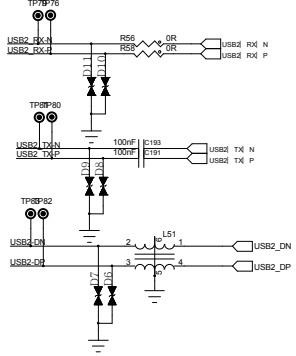
USB2_DN
USB2_DP

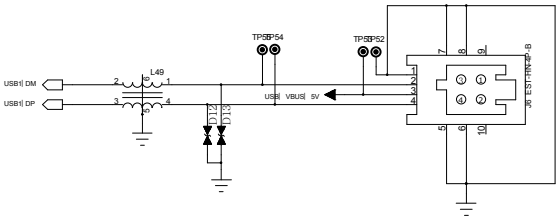
USB1_DM
USB1_DP
USB1_VBUS_5V

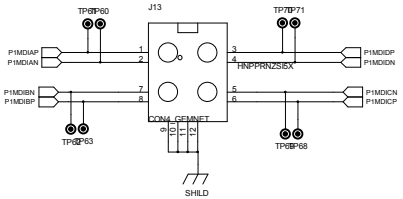
J13
HNPPRNZS16X
CON4_GEMNET
SHILD

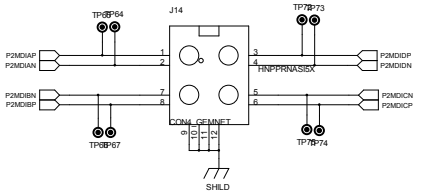
J14
HNPPRNAS16X
CON4_GEMNET
SHILD

ACC 检测

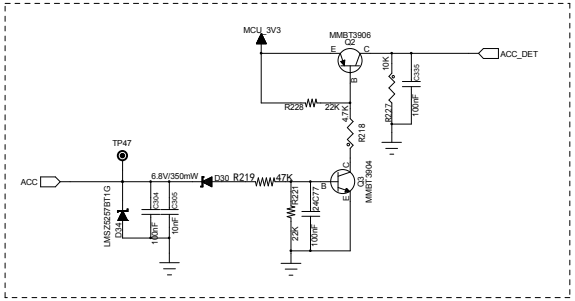
MCU_3V3
ACC_DET
ACC

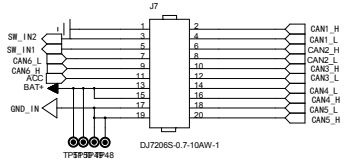
J7
DJ7206S-0.7-10AW-1

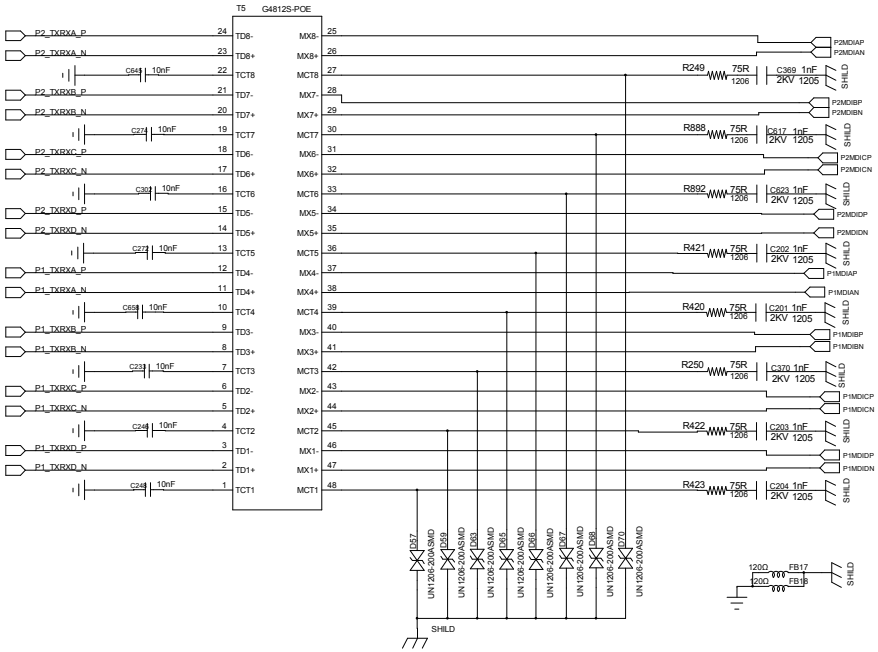
T5
G4812S-POE
SHILD

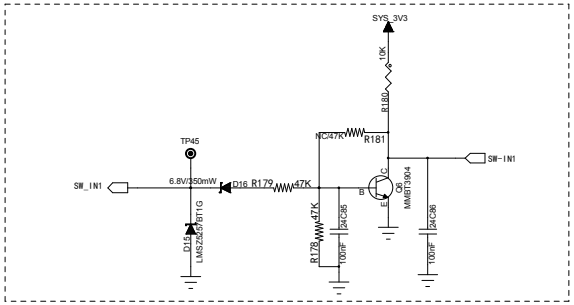
SYS_3V3
SW_IN1

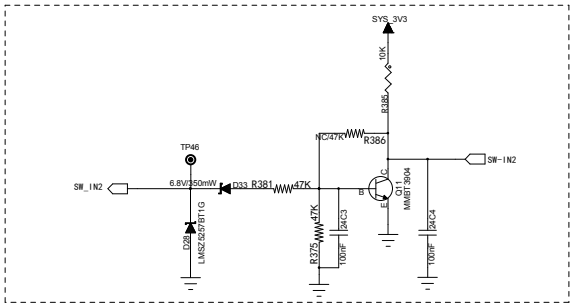
SYS_3V3
SW_IN2

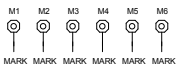
M1
M2
M3
M4
M5
M6
MARK
MARK
MARK
MARK
MARK
MARK