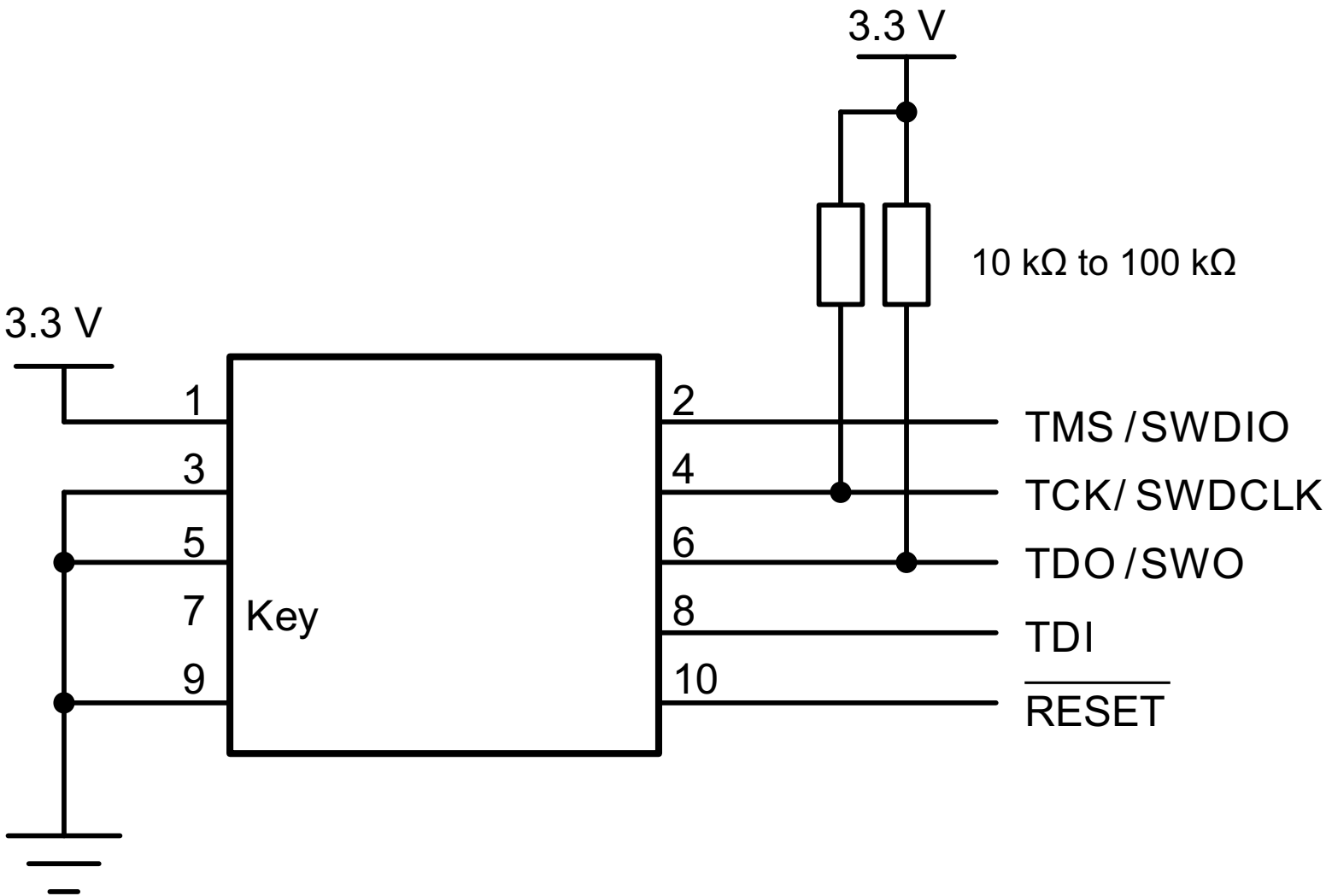

Fig 180. Cortex Debug Connector