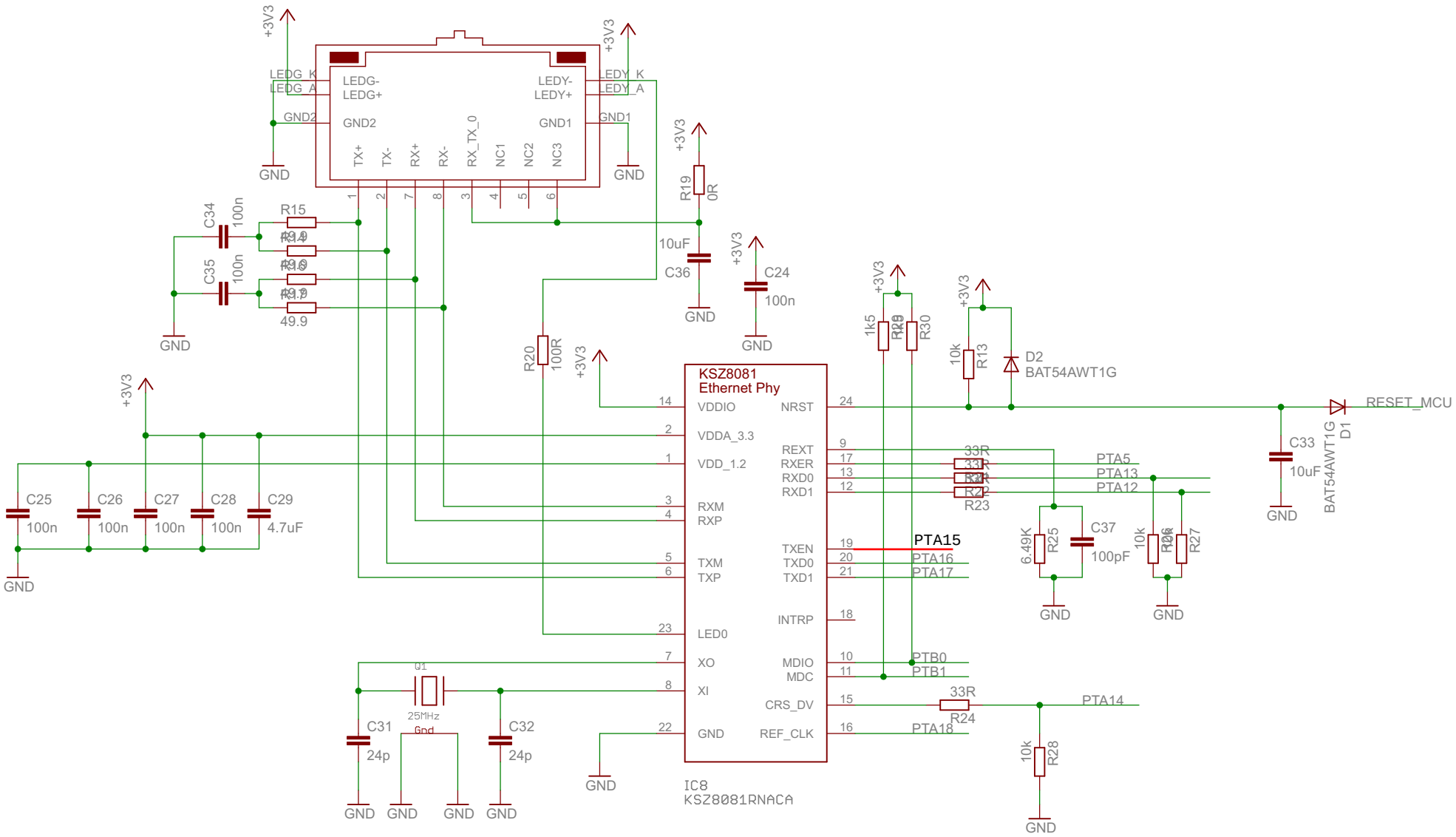
KSZ8081
Ethernet Phy
VDDIO
VDDA_3.3
VDD_1.2
RXM
RXP
TXM
TXP
LED0
XO
XI
GND
NRST
REXT
RXER
RXD0
RXD1
TXEN
TXD0
TXD1
INTRP
MDIO
MDC
CRS_DV
REF_CLK
IC8
KSZ8081RNACA
LEDG-
LEDG+
LEDY-
LEDY+
LEDG_K
LEDG_A
LEDY_K
LEDY_A
GND2
GND1
TX+
TX-
RX+
RX-
RX_TX_0
NC1
NC2
NC3
+3V3
GND
R15
49.9
C34
100n
C35
100n
R19
0R
10uF
C36
C24
100n
R20
100R
C25
100n
C26
100n
C27
100n
C28
100n
C29
4.7uF
Q1
25MHz
C31
24p
C32
24p
1k5
R29
R30
10k
R13
D2
BAT54AWT1G
RESET_MCU
D1
BAT54AWT1G
C33
10uF
33R
R21
R22
R23
PTA5
PTA13
PTA12
PTA15
PTA16
PTA17
6.49K
R25
C37
100pF
10k
R26
R27
PTB0
PTB1
33R
R24
PTA14
PTA18
10k
R28