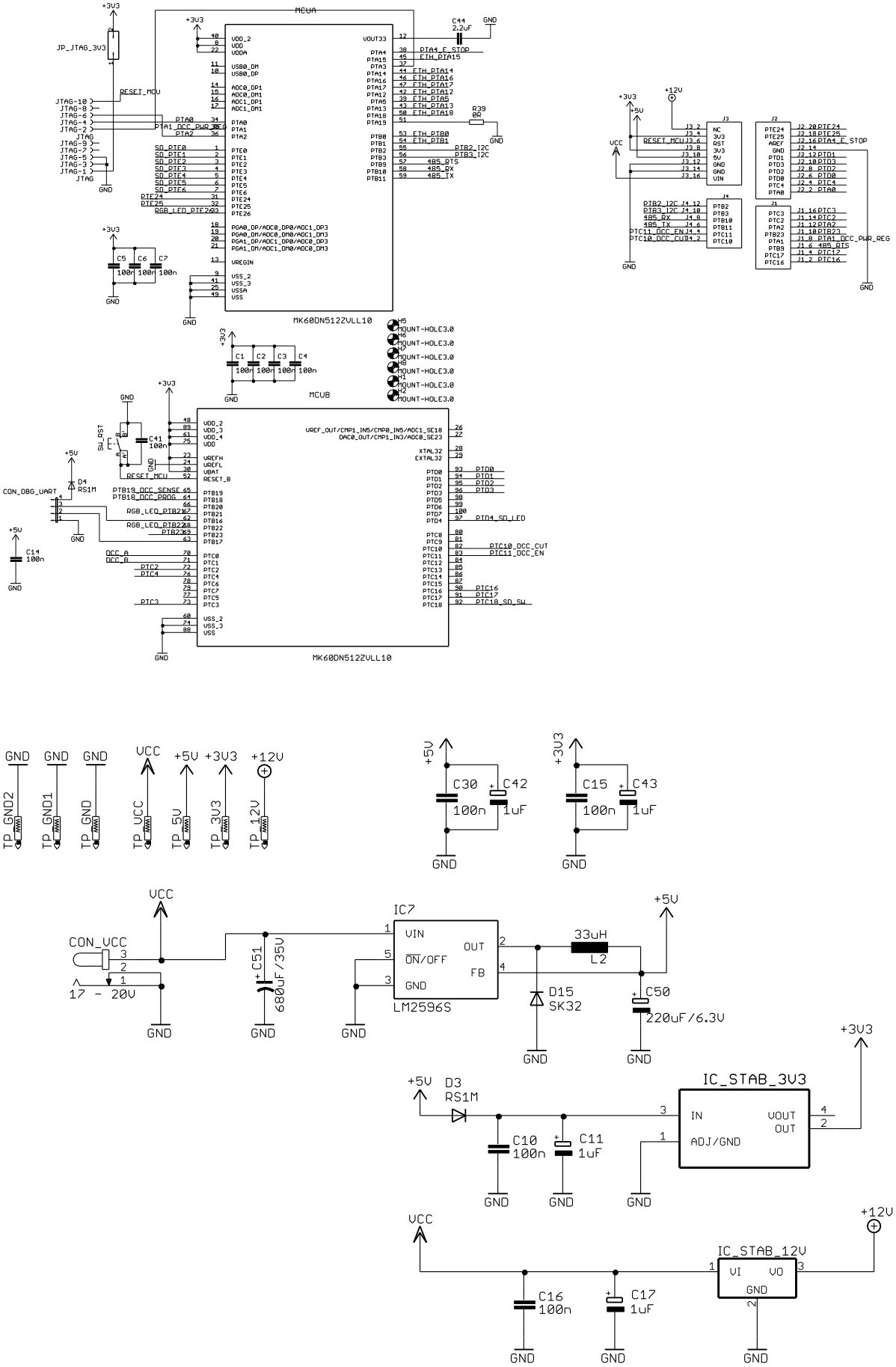
MCUA
MK60DN512ZVLL10
MCUB
MK60DN512ZVLL10
JP_JTAG_3V3
RESET_MCU
C44 2.2uF
R39 0Ω
C5 100n
C6 100n
C7 100n
C1 100n
C2 100n
C3 100n
C4 100n
C41 100n
D4 RS1M
C14 100n
CON_DBG_UART
J3
J2
J4
J1
TP_GND2
TP_GND1
TP_GND
TP_VCC
TP_5V
TP_3V3
TP_12V
C30 100n
C42 1uF
C15 100n
C43 1uF
CON_VCC
17 - 20V
C51 680uF/35V
IC7
LM2596S
33uH
L2
D15 SK32
C50 220uF/6.3V
D3 RS1M
C10 100n
C11 1uF
IC_STAB_3V3
C16 100n
C17 1uF
IC_STAB_12V

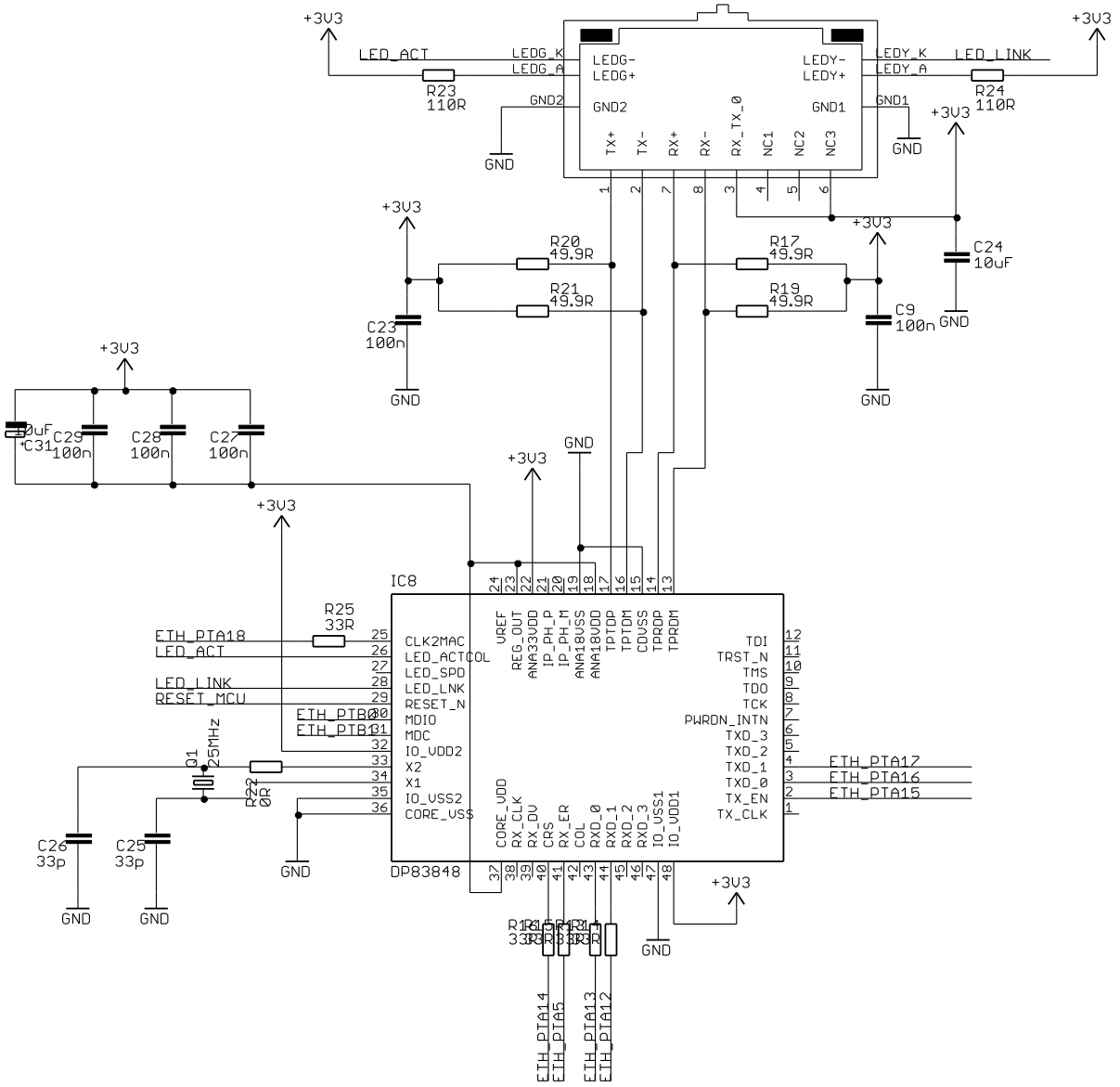
+3V3
LED_ACT
LEDG_K
LEDG_A
LEDG-
LEDG+
GND2
LEDY-
LEDY+
LEDY_K
LEDY_A
LED_LINK
GND1
R23
110R
R24
110R
GND
TX+
TX-
RX+
RX-
RX_TX_0
NC1
NC2
NC3
R20
49.9R
R21
49.9R
R17
49.9R
R19
49.9R
C23
100n
C9
100n
C24
10uF
C31
C29
100n
C28
100n
C27
100n
IC8
DP83848
R25
33R
ETH_PTA18
LED_ACT
LED_LINK
RESET_MCU
ETH_PTB0
ETH_PTB1
Q1
25MHz
R22
0R
C26
33p
C25
33p
CLK2MAC
LED_ACTCOL
LED_SPD
LED_LNK
RESET_N
MDIO
MDC
IO_VDD2
X2
X1
IO_VSS2
CORE_VSS
VREF
REG_OUT
ANA3VDD
IP_PH_P
IP_PH_M
ANA18VSS
ANA18VDD
TPTDP
TPTDM
CDVSS
TPRDP
TPRDM
TDI
TRST_N
TMS
TDO
TCK
PWRDN_INTN
TXD_3
TXD_2
TXD_1
TXD_0
TX_EN
TX_CLK
ETH_PTA17
ETH_PTA16
ETH_PTA15
CORE_VDD
RX_CLK
RX_DV
CRS
RX_ER
COL
RXD_0
RXD_1
RXD_2
RXD_3
IO_VSS1
IO_VDD1
ETH_PTA14
ETH_PTA5
ETH_PTA13
ETH_PTA12