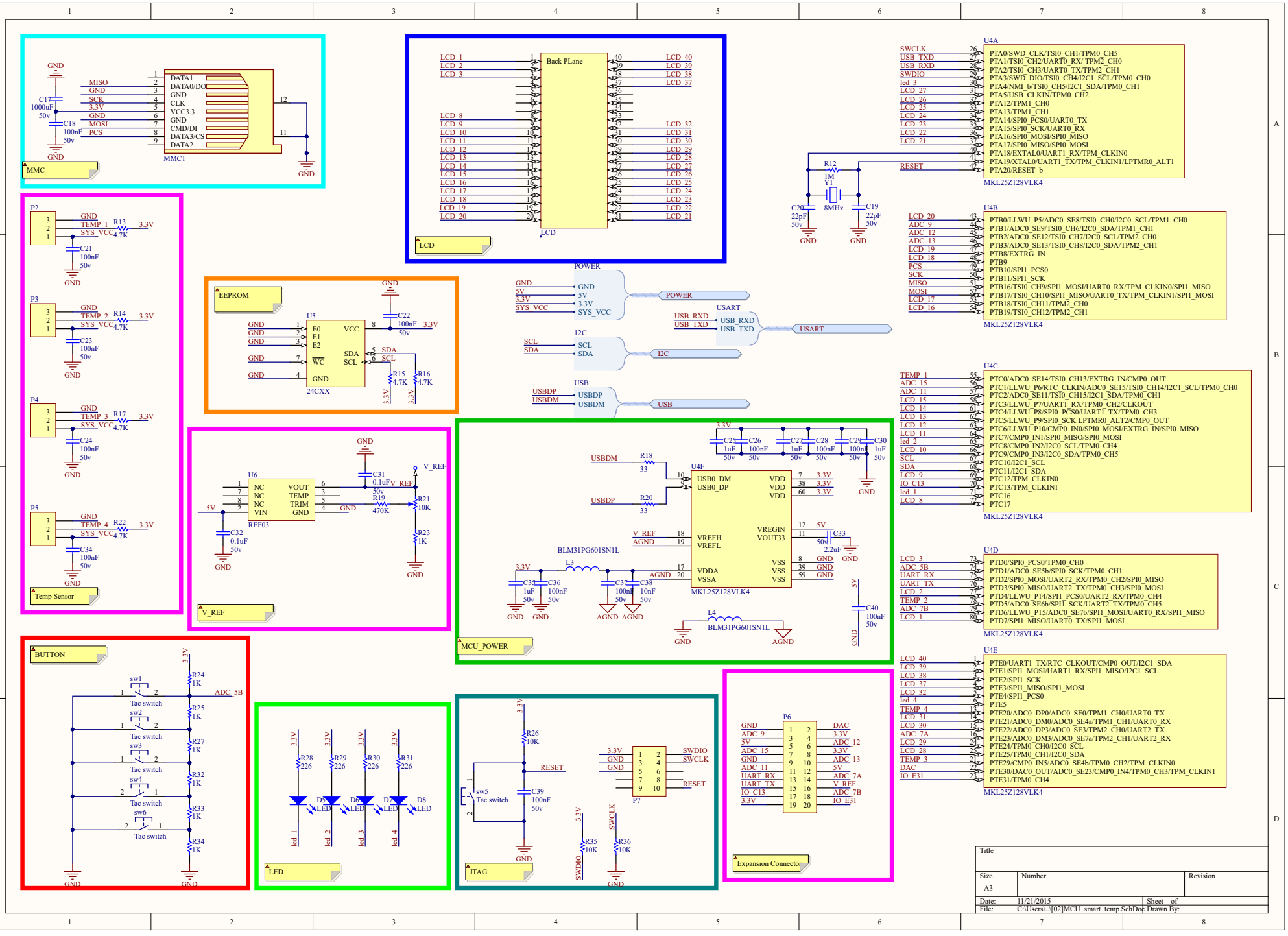
MMC
MMC1
DATA1
DATA0/DO
GND
CLK
VCC3.3
CMD/DI
DATA3/CS
DATA2
MISO
SCK
3.3V
MOSI
PCS
C17 1000uF 50v
C18 100nF 50v
LCD
Back PLane
LCD 1
LCD 2
LCD 3
LCD 8
LCD 9
LCD 10
LCD 11
LCD 12
LCD 13
LCD 14
LCD 15
LCD 16
LCD 17
LCD 18
LCD 19
LCD 20
LCD 40
LCD 39
LCD 38
LCD 37
LCD 32
LCD 31
LCD 30
LCD 29
LCD 28
LCD 27
LCD 26
LCD 25
LCD 24
LCD 23
LCD 22
LCD 21
U4A
SWCLK
USB_TXD
USB_RXD
SWDIO
led_3
LCD_27
LCD_26
LCD_25
LCD_24
LCD_23
LCD_22
LCD_21
RESET
PTA0/SWD_CLK/TSI0_CH1/TPM0_CH5
PTA1/TSI0_CH2/UART0_RX/ TPM2_CH0
PTA2/TSI0_CH3/UART0_TX/TPM2_CH1
PTA3/SWD_DIO/TSI0_CH4/I2C1_SCL/TPM0_CH0
PTA4/NMI_b/TSI0_CH5/I2C1_SDA/TPM0_CH1
PTA5/USB_CLKIN/TPM0_CH2
PTA12/TPM1_CH0
PTA13/TPM1_CH1
PTA14/SPI0_PCS0/UART0_TX
PTA15/SPI0_SCK/UART0_RX
PTA16/SPI0_MOSI/SPI0_MISO
PTA17/SPI0_MISO/SPI0_MOSI
PTA18/EXTAL0/UART1_RX/TPM_CLKIN0
PTA19/XTAL0/UART1_TX/TPM_CLKIN1/LPTMR0_ALT1
PTA20/RESET_b
MKL25Z128VLK4
R12 1M
Y1 8MHz
C20 22pF 50v
C19 22pF 50v
U4B
LCD_20
ADC_9
ADC_12
ADC_13
LCD_19
LCD_18
PCS
SCK
MISO
MOSI
LCD_17
LCD_16
PTB0/LLWU_P5/ADC0_SE8/TSI0_CH0/I2C0_SCL/TPM1_CH0
PTB1/ADC0_SE9/TSI0_CH6/I2C0_SDA/TPM1_CH1
PTB2/ADC0_SE12/TSI0_CH7/I2C0_SCL/TPM2_CH0
PTB3/ADC0_SE13/TSI0_CH8/I2C0_SDA/TPM2_CH1
PTB8/EXTRG_IN
PTB9
PTB10/SPI1_PCS0
PTB11/SPI1_SCK
PTB16/TSI0_CH9/SPI1_MOSI/UART0_RX/TPM_CLKIN0/SPI1_MISO
PTB17/TSI0_CH10/SPI1_MISO/UART0_TX/TPM_CLKIN1/SPI1_MOSI
PTB18/TSI0_CH11/TPM2_CH0
PTB19/TSI0_CH12/TPM2_CH1
MKL25Z128VLK4
POWER
USART
I2C
USB
U4C
TEMP_1
ADC_15
ADC_11
LCD_15
LCD_14
LCD_13
LCD_12
LCD_11
led_2
LCD_10
SCL
SDA
LCD_9
IO_C13
led_1
LCD_8
PTC0/ADC0_SE14/TSI0_CH13/EXTRG_IN/CMP0_OUT
PTC1/LLWU_P6/RTC_CLKIN/ADC0_SE15/TSI0_CH14/I2C1_SCL/TPM0_CH0
PTC2/ADC0_SE11/TSI0_CH15/I2C1_SDA/TPM0_CH1
PTC3/LLWU_P7/UART1_RX/TPM0_CH2/CLKOUT
PTC4/LLWU_P8/SPI0_PCS0/UART1_TX/TPM0_CH3
PTC5/LLWU_P9/SPI0_SCK LPTMR0_ALT2/CMP0_OUT
PTC6/LLWU_P10/CMP0_IN0/SPI0_MOSI/EXTRG_IN/SPI0_MISO
PTC7/CMP0_IN1/SPI0_MISO/SPI0_MOSI
PTC8/CMP0_IN2/I2C0_SCL/TPM0_CH4
PTC9/CMP0_IN3/I2C0_SDA/TPM0_CH5
PTC10/I2C1_SCL
PTC11/I2C1_SDA
PTC12/TPM_CLKIN0
PTC13/TPM_CLKIN1
PTC16
PTC17
MKL25Z128VLK4
U4D
LCD_3
ADC_5B
UART_RX
UART_TX
LCD_2
TEMP_2
ADC_7B
LCD_1
PTD0/SPI0_PCS0/TPM0_CH0
PTD1/ADC0_SE5b/SPI0_SCK/TPM0_CH1
PTD2/SPI0_MOSI/UART2_RX/TPM0_CH2/SPI0_MISO
PTD3/SPI0_MISO/UART2_TX/TPM0_CH3/SPI0_MOSI
PTD4/LLWU_P14/SPI1_PCS0/UART2_RX/TPM0_CH4
PTD5/ADC0_SE6b/SPI1_SCK/UART2_TX/TPM0_CH5
PTD6/LLWU_P15/ADC0_SE7b/SPI1_MOSI/UART0_RX/SPI1_MISO
PTD7/SPI1_MISO/UART0_TX/SPI1_MOSI
MKL25Z128VLK4
U4E
LCD_40
LCD_39
LCD_38
LCD_37
LCD_32
led_4
TEMP_4
LCD_31
LCD_30
ADC_7A
LCD_29
LCD_28
TEMP_3
DAC
IO_E31
PTE0/UART1_TX/RTC_CLKOUT/CMP0_OUT/I2C1_SDA
PTE1/SPI1_MOSI/UART1_RX/SPI1_MISO/I2C1_SCL
PTE2/SPI1_SCK
PTE3/SPI1_MISO/SPI1_MOSI
PTE4/SPI1_PCS0
PTE5
PTE20/ADC0_DP0/ADC0_SE0/TPM1_CH0/UART0_TX
PTE21/ADC0_DM0/ADC0_SE4a/TPM1_CH1/UART0_RX
PTE22/ADC0_DP3/ADC0_SE3/TPM2_CH0/UART2_TX
PTE23/ADC0_DM3/ADC0_SE7a/TPM2_CH1/UART2_RX
PTE24/TPM0_CH0/I2C0_SCL
PTE25/TPM0_CH1/I2C0_SDA
PTE29/CMP0_IN5/ADC0_SE4b/TPM0_CH2/TPM_CLKIN0
PTE30/DAC0_OUT/ADC0_SE23/CMP0_IN4/TPM0_CH3/TPM_CLKIN1
PTE31/TPM0_CH4
MKL25Z128VLK4
P2
P3
P4
P5
TEMP_1
TEMP_2
TEMP_3
TEMP_4
SYS_VCC
R13 4.7K
R14 4.7K
R17 4.7K
R22 4.7K
C21 100nF 50v
C23 100nF 50v
C24 100nF 50v
C34 100nF 50v
Temp Sensor
EEPROM
U5
E0
E1
E2
WC
VCC
SDA
SCL
24CXX
C22 100nF 50v
R15 4.7K
R16 4.7K
V_REF
U6
NC
VIN
VOUT
TEMP
TRIM
REF03
C31 0.1uF 50v
R19 470K
R21 10K
R23 1K
C32 0.1uF 50v
MCU_POWER
U4F
USB0_DM
USB0_DP
VDD
VREFH
VREFL
VREGIN
VOUT33
VDDA
VSSA
VSS
MKL25Z128VLK4
R18 33
R20 33
C25 1uF 50v
C26 100nF 50v
C27 1uF 50v
C28 100nF 50v
C29 100nF 50v
C30 1uF 50v
C33 2.2uF 50v
L3 BLM31PG601SN1L
L4 BLM31PG601SN1L
C35 1uF 50v
C36 100nF 50v
C37 100nF 50v
C38 10nF 50v
C40 100nF 50v
BUTTON
sw1
sw2
sw3
sw4
sw6
Tac switch
ADC_5B
R24 1K
R25 1K
R27 1K
R32 1K
R33 1K
R34 1K
LED
R28 226
R29 226
R30 226
R31 226
D5 LED
D6 LED
D7 LED
D8 LED
led_1
led_2
led_3
led_4
JTAG
R26 10K
RESET
sw5
C39 100nF 50v
P7
SWDIO
SWCLK
R35 10K
R36 10K
Expansion Connector
P6
GND
ADC_9
5V
ADC_15
GND
ADC_11
UART_RX
UART_TX
IO_C13
3.3V
DAC
ADC_12
ADC_13
ADC_7A
V_REF
ADC_7B
IO_E31
Title
Size
A3
Number
Revision
Date: 11/21/2015
Sheet of
File: C:\Users\..\[02]MCU_smart_temp.SchDoc
Drawn By: