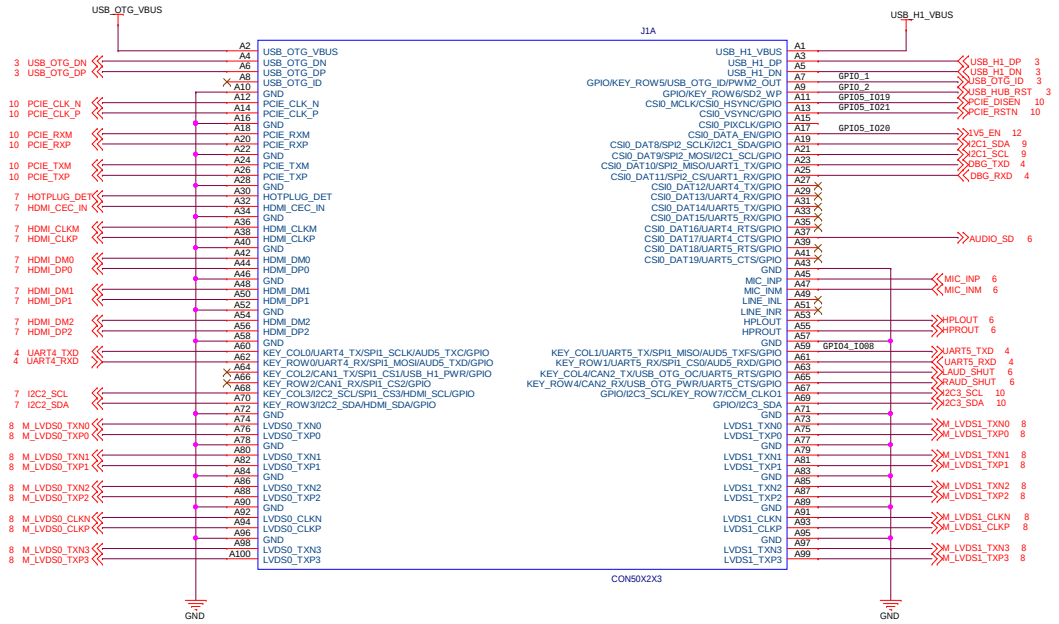

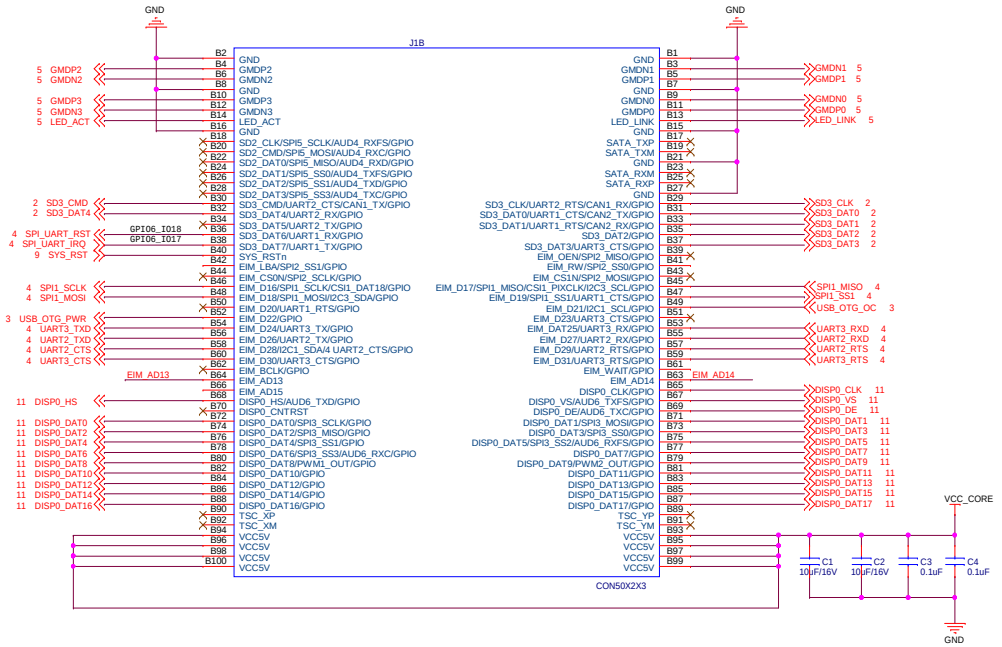

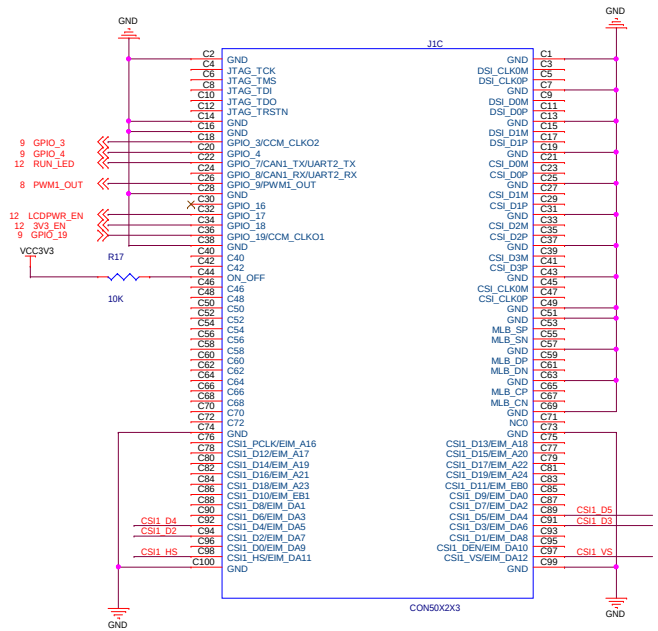

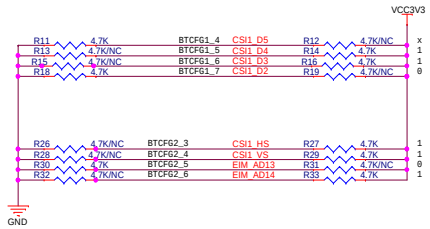

Title	<Title>	
Size C	Document Number <Doc>	Rev V1.00
Date: Tuesday, January 19, 2016	Sheet 1 of 12	

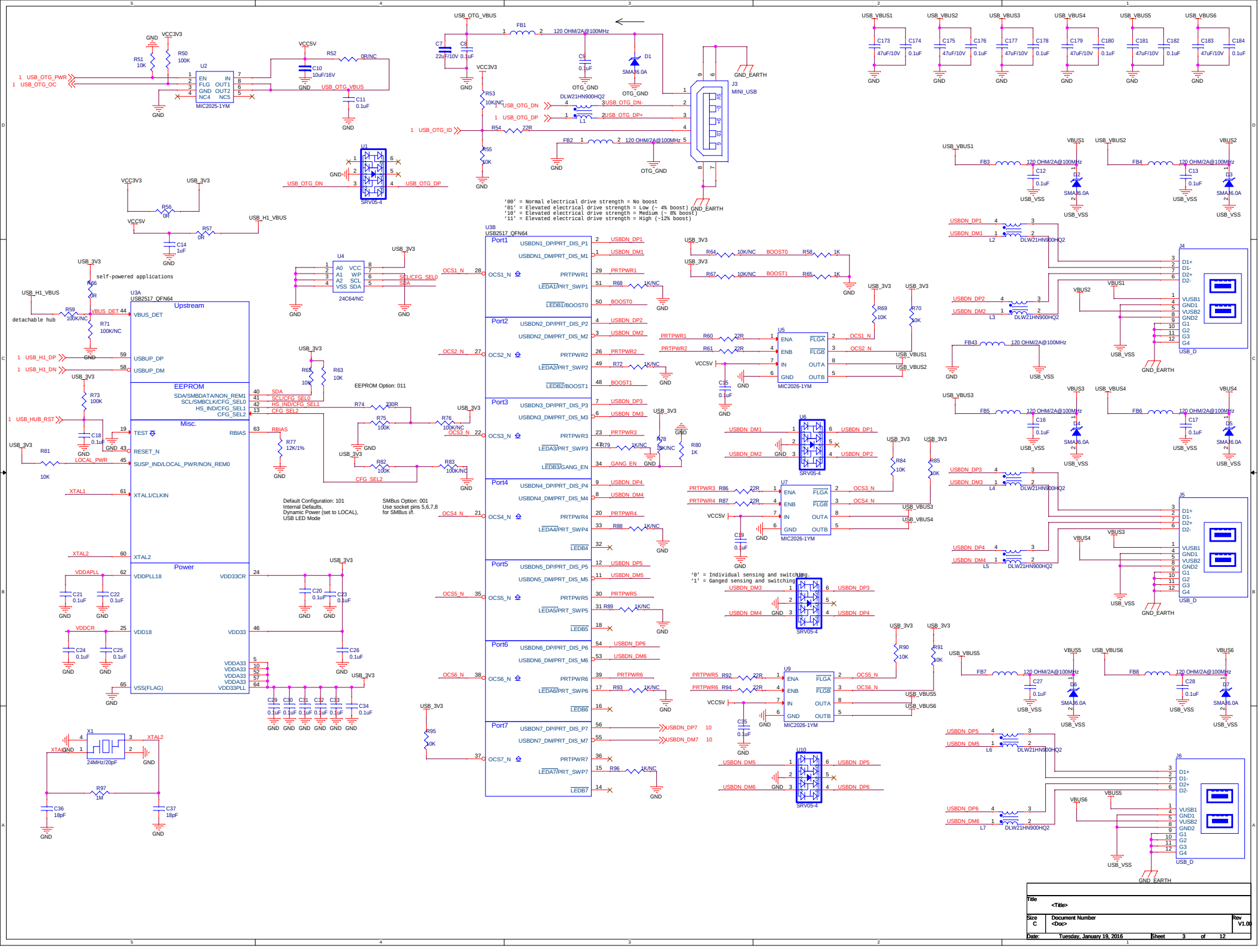
USB_OTG_VBUS
FB1
120 OHM/2A@100MHz
C7 22uF/10V
C8 0.1uF
C9 0.1uF
OTG_GND
D1 SMAJ6.0A
J3 MINI_USB
GND_EARTH
DLW21HN900HQ2
L1
USB_OTG_DN
USB_OTG_DP
USB_OTG_ID
R54 22R
FB2 120 OHM/2A@100MHz
R53 10K/NC
R55 10K
VCC3V3
U2 MIC2025-1YM
EN IN FLG OUT1 GND OUT2 NC4 NC5
USB_OTG_PWR
USB_OTG_OC
R50 100K
R51 10K
R52 0R/NC
C10 10uF/16V
C11 0.1uF
VCC5V
U1 SRV05-4
USB_OTG_DN
USB_OTG_DP
USB_VBUS1 USB_VBUS2 USB_VBUS3 USB_VBUS4 USB_VBUS5 USB_VBUS6
C173 C174 C175 C176 C177 C178 C179 C180 C181 C182 C183 C184
47uF/10V 0.1uF
'00' = Normal electrical drive strength = No boost
'01' = Elevated electrical drive strength = Low (~ 4% boost) GND_EARTH
'10' = Elevated electrical drive strength = Medium (~ 8% boost)
'11' = Elevated electrical drive strength = High (~12% boost)
USB_3V3
R56 0R
R57 0R
USB_H1_VBUS
C14 1uF
U4 24C64/NC
A0 A1 A2 VSS VCC WP SCL SDA
SCL/CFG_SEL0
SDA
OCS1_N
OCS2_N
OCS3_N
OCS4_N
OCS5_N
OCS6_N
U3A USB2517_QFN64
Upstream
VBUS_DET
USBUP_DP
USBUP_DM
EEPROM
SDA/SMBDATA/NON_REM1
SCL/SMBCLK/CFG_SEL0
HS_IND/CFG_SEL1
CFG_SEL2
Misc.
TEST
RESET_N
SUSP_IND/LOCAL_PWR/NON_REM0
XTAL1/CLKIN
XTAL2
RBIAS
Power
VDDPLL18
VDD33CR
VDD18
VDD33
VDD33PLL
VSS(FLAG)
VDDA33
self-powered applications
detachable hub
R66 0R
R59 100K/NC
R71 100K/NC
USB_HUB_RST
R73 100K
C18 0.1uF
R81 10K
LOCAL_PWR
R65 10K
R63 10K
EEPROM Option: 011
R74 330R
R75 100K
R76 100K/NC
R77 12K/1%
R82 100K
R83 100K/NC
CFG_SEL2
Default Configuration: 101
Internal Defaults,
Dynamic Power (set to LOCAL),
USB LED Mode
SMBus Option: 001
Use socket pins 5,6,7,8
for SMBus i/f.
C21 C22 C23 C24 C25 C26 C20 0.1uF
C29 C30 C31 C32 C33 C34 0.1uF
X1 24MHz/20pF
R97 1M
C36 18pF
C37 18pF
U3B USB2517_QFN64
Port1
USBDN1_DP/PRT_DIS_P1
USBDN1_DM/PRT_DIS_M1
PRTPWR1
LEDA1/PRT_SWP1
LEDB1/BOOST0
Port2
USBDN2_DP/PRT_DIS_P2
USBDN2_DM/PRT_DIS_M2
PRTPWR2
LEDA2/PRT_SWP2
LEDB2/BOOST1
Port3
USBDN3_DP/PRT_DIS_P3
USBDN3_DM/PRT_DIS_M3
PRTPWR3
LEDA3/PRT_SWP3
LEDB3/GANG_EN
Port4
USBDN4_DP/PRT_DIS_P4
USBDN4_DM/PRT_DIS_M4
PRTPWR4
LEDA4/PRT_SWP4
LEDB4
Port5
USBDN5_DP/PRT_DIS_P5
USBDN5_DM/PRT_DIS_M5
PRTPWR5
LEDA5/PRT_SWP5
LEDB5
Port6
USBDN6_DP/PRT_DIS_P6
USBDN6_DM/PRT_DIS_M6
PRTPWR6
LEDA6/PRT_SWP6
LEDB6
Port7
USBDN7_DP/PRT_DIS_P7
USBDN7_DM/PRT_DIS_M7
PRTPWR7
LEDA7/PRT_SWP7
LEDB7
R64 10K/NC BOOST0 R58 1K
R67 10K/NC BOOST1 R65 1K
R68 1K/NC
R72 1K/NC
R78 1K/NC
R79 1K/NC
R80 1K
R88 1K/NC
R89 1K/NC
R93 1K/NC
R96 1K/NC
R95 10K
U5 MIC2026-1YM
ENA ENB IN GND FLGA FLGB OUTA OUTB
PRTPWR1 R60 22R
PRTPWR2 R61 22R
OCS1_N
OCS2_N
R69 10K
R70 10K
C15 0.1uF
U6 SRV05-4
USBDN_DM1 USBDN_DP1
USBDN_DM2 USBDN_DP2
R84 10K
R85 10K
U7 MIC2026-1YM
PRTPWR3 R86 22R
PRTPWR4 R87 22R
OCS3_N
OCS4_N
C19 0.1uF
'0' = Individual sensing and switching.
'1' = Ganged sensing and switching.
U8 SRV05-4
USBDN_DM3 USBDN_DP3
USBDN_DM4 USBDN_DP4
R90 10K
R91 10K
U9 MIC2026-1YM
PRTPWR5 R92 22R
PRTPWR6 R94 22R
OCS5_N
OCS6_N
C25 0.1uF
U10 SRV05-4
USBDN_DM5 USBDN_DP5
USBDN_DM6 USBDN_DP6
USBDN_DP7 10
USBDN_DM7 10
FB3 120 OHM/2A@100MHz
FB4 120 OHM/2A@100MHz
FB43 120 OHM/2A@100MHz
FB5 120 OHM/2A@100MHz
FB6 120 OHM/2A@100MHz
FB7 120 OHM/2A@100MHz
FB8 120 OHM/2A@100MHz
C12 C13 C16 C17 C27 C28 0.1uF
D2 D3 D4 D5 D6 D7 SMAJ6.0A
VBUS1 VBUS2 VBUS3 VBUS4 VBUS5 VBUS6
USB_VSS
L2 L3 L4 L5 L6 L7 DLW21HN900HQ2
J4 J5 J6 USB_D
D1+ D1- D2+ D2-
VUSB1 GND1 VUSB2 GND2 G1 G2 G3 G4
Title
<Title>
Size C
Document Number
<Doc>
Rev V1.00
Date: Tuesday, January 19, 2016
Sheet 3 of 12