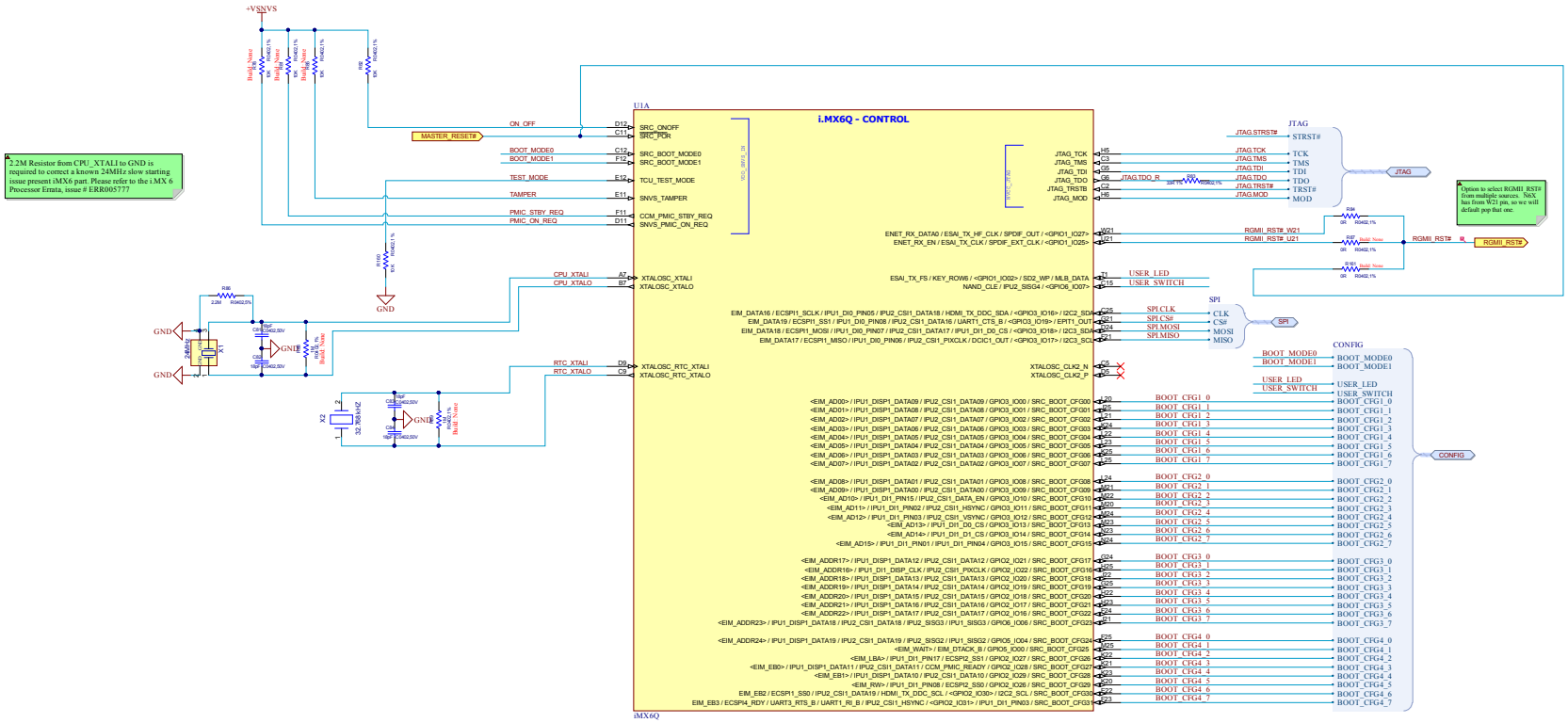

Connect Tech Inc.	Doc Num: CTIB-66067G	PCB Num: 66067G Rev: A	Date: 06/13/2014	Title: ELOW ARM SBC	Sheet Name: Sheet Information	Filename: imx6_control-config.SchDoc	Designer: PD	Sheet: 4 of 24