iMX8M Plus DDR Controller

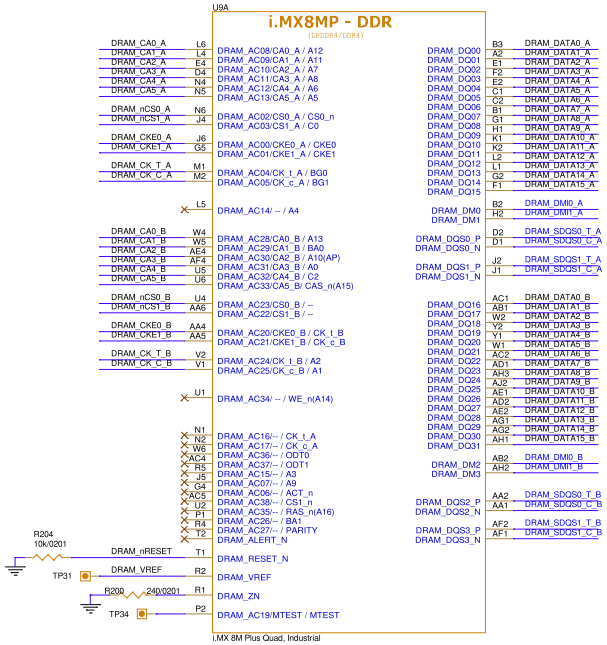

4GByte LPDDR4

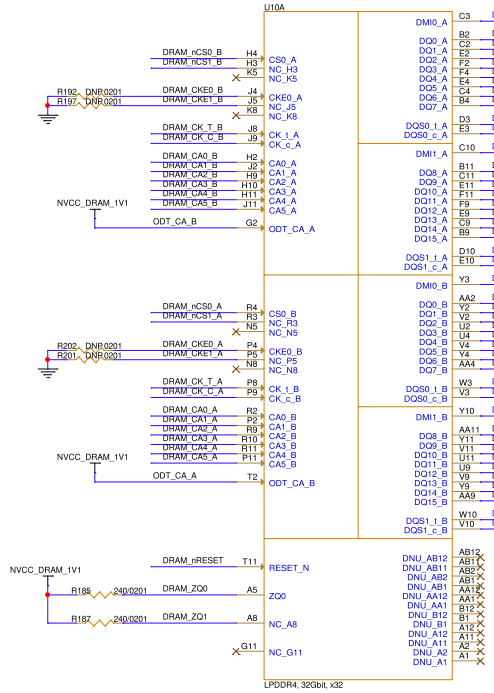

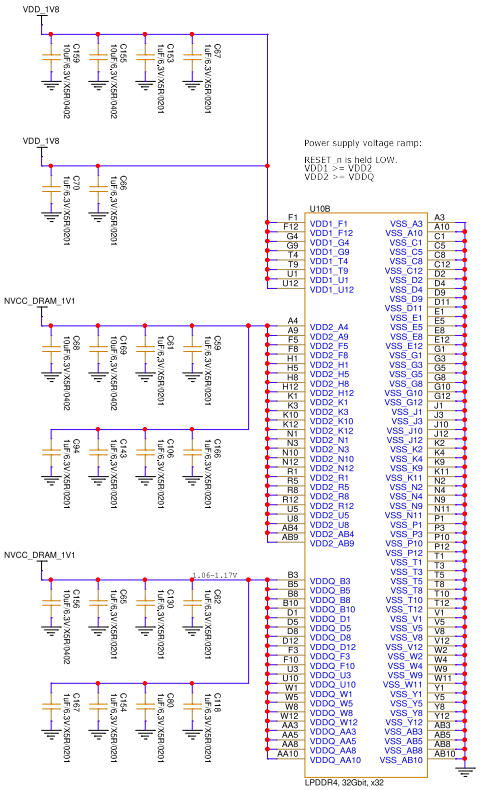

Power supply voltage ramp:

RESET_n is held LOW.
VDD1 >= VDD2
VDD2 >= VDDQ

Note:

LPDDR4 ODT on i.MX 8M Plus is command-based, ODT_CA_A/B of LPDDR4 part should be connected directly to VDD2.

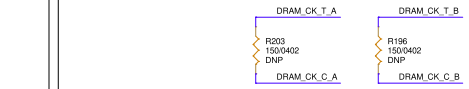

Data Bus

Pin Name	LPDDR4	DDR4
DRAM_DQS0_P	DQS0_t_A	DQS_t_A
DRAM_DQS0_N	DQS0_c_A	DQS_c_A
DRAM_DM0	DMI0_A	DM_n_A / DBI_n_A
DRAM_DQ00	DQ0_A	DQ0_A
DRAM_DQ01	DQ1_A	DQ1_A
DRAM_DQ02	DQ2_A	DQ2_A
DRAM_DQ03	DQ3_A	DQ3_A
DRAM_DQ04	DQ4_A	DQ4_A
DRAM_DQ05	DQ5_A	DQ5_A
DRAM_DQ06	DQ6_A	DQ6_A
DRAM_DQ07	DQ7_A	DQ7_A
DRAM_DQS1_P	DQS1_t_A	DQS1_t_A
DRAM_DQS1_N	DQS1_c_A	DQS1_c_A
DRAM_DM1	DMI1_A	DM_n_A / DBI_n_A
DRAM_DQ08	DQ08_A	DQ0_A
DRAM_DQ09	DQ09_A	DQ1_A
DRAM_DQ10	DQ10_A	DQ2_A
DRAM_DQ11	DQ11_A	DQ3_A
DRAM_DQ12	DQ12_A	DQ4_A
DRAM_DQ13	DQ13_A	DQ5_A
DRAM_DQ14	DQ14_A	DQ6_A
DRAM_DQ15	DQ15_A	DQ7_A
DRAM_DQS2_P	DQSC_t_B	DQS_t_B
DRAM_DQS2_N	DQSC_c_B	DQS_c_B
DRAM_DM2	DMI0_B	DM_n_B / DBI_n_B
DRAM_DQ16	DQ0_B	DQ0_B
DRAM_DQ17	DQ1_B	DQ1_B
DRAM_DQ18	DQ2_B	DQ2_B
DRAM_DQ19	DQ3_B	DQ3_B
DRAM_DQ20	DQ4_B	DQ4_B
DRAM_DQ21	DQ5_B	DQ5_B
DRAM_DQ22	DQ6_B	DQ6_B
DRAM_DQ23	DQ7_B	DQ7_B
DRAM_DQS3_P	DQST_t_B	DQSU_t_B
DRAM_DQS3_N	DQSC_c_B	DQSU_c_B
DRAM_DM3	DMI1_B	DM_n_B / DBI_n_B
DRAM_DQ24	DQ08_B	DQ0_B
DRAM_DQ25	DQ09_B	DQ1_B
DRAM_DQ26	DQ10_B	DQ2_B
DRAM_DQ27	DQ11_B	DQ3_B
DRAM_DQ28	DQ12_B	DQ4_B
DRAM_DQ29	DQ13_B	DQ5_B
DRAM_DQ30	DQ14_B	DQ6_B
DRAM_DQ31	DQ15_B	DQ7_B

Command/Address

Pin Name	LPDDR4	DDR4
DRAM_RESET_N	RESET_N	RESET_n
DRAM_ALERT_N	MTEST1	ALERT_n / MTEST1
DRAM_AC00	CKE0_A	CKE0
DRAM_AC01	CKE1_A	CKE1
DRAM_AC02	CS0_A	CS0_n
DRAM_AC03	C0_A	C0
DRAM_AC04	CK_t_A	BG0
DRAM_AC05	CK_c_A	BG1
DRAM_AC06	/	ACT_n
DRAM_AC07	/	A9
DRAM_AC08	CA0_A	A12
DRAM_AC09	CA1_A	A11
DRAM_AC10	CA2_A	A7
DRAM_AC11	CA3_A	A8
DRAM_AC12	CA4_A	A6
DRAM_AC13	CA5_A	A5
DRAM_AC14	/	A4
DRAM_AC15	/	A3
DRAM_AC16	/	CK_t_A
DRAM_AC17	/	CK_c_A
DRAM_AC19	MTEST	MTEST
DRAM_AC20	CKE0_B	CK_t_B
DRAM_AC21	CKE1_B	CK_c_B
DRAM_AC22	CS1_B	/
DRAM_AC23	CS0_B	/
DRAM_AC24	CK_t_B	A2
DRAM_AC25	CK_c_B	A1
DRAM_AC26	/	BA1
DRAM_AC27	/	PARITY
DRAM_AC28	CA0_B	A13
DRAM_AC29	CA1_B	BA0
DRAM_AC30	CA2_B	A10 / AP
DRAM_AC31	CA3_B	A0
DRAM_AC32	CA4_B	C2
DRAM_AC33	CA5_B	CAS_n / A15
DRAM_AC34	/	WE_n / A14
DRAM_AC35	/	RAS_n / A16
DRAM_AC36	/	ODT0
DRAM_AC37	/	ODT1
DRAM_AC38	/	CS1_n
DRAM_ZN	ZQ	ZQ_n
DRAM_VREF	VREF	VREF

Title	iMX8M Plus LPDDR4
Size C	Document Number 001-0980-00
Rev	0
Date:	Tuesday, September 10, 2024
Sheet	7 of 14