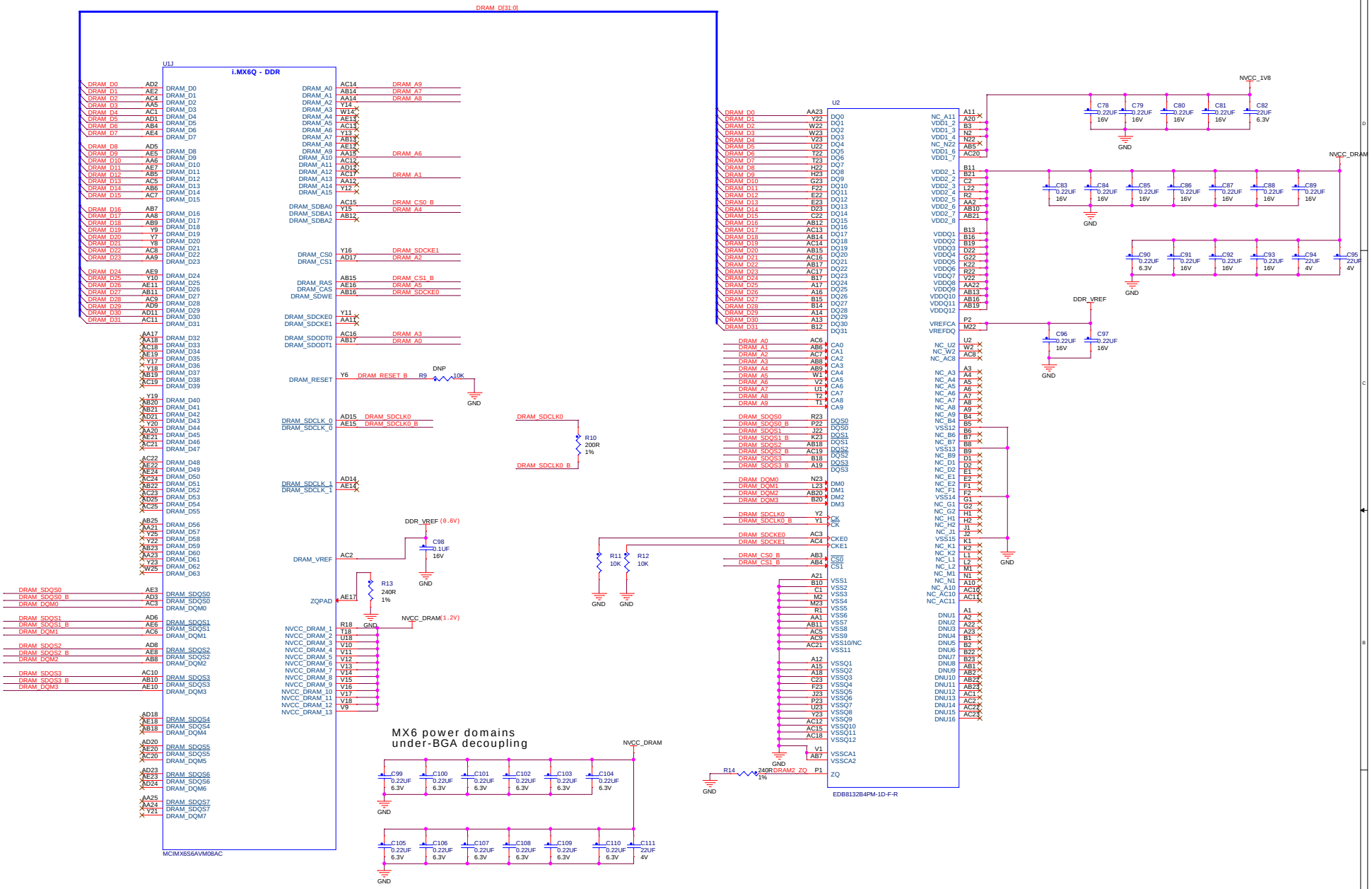

Size	Document Number	Rev
C		1.0

Date: Monday, July 24, 2017 Sheet 2 of 17