i.MX6D/Q/S Core Board HW User Guide

V0.1, 09/20/2012

Revision History:

Rev. Number	date	Changes
V0.1	09/20/2012	Initialization

Contents

1.1 About This Document
1.1.1 Audience
1.1.2 Objective
1.2 MX6D/Q /S Core board HW User Guide
1.2.1 Pin Connector
1.2.2 Power
1.2.3 Reset
1.2.4 Debug UART
1.2.5 Application UART
1.2.6 CSI
1.2.7 SPI
1.2.8 I2C
1.2.9 VGA
1.2.10 HDMI
1.2.11 LVDS0
1.2.12 LVDS1
1.2.13 GPIO
1.2.14 SATA
1.2.15 Ethernet
1.2.16 PWM
1.2.17 CAN
1.2.18 Audio
1.2.19 PCIE
1.2.20 SDHC
1.2.21 Clock Out
1.2.22 USB OTG
1.2.23 USB HOST
1.2.24 I2S

1.1 About This Document.

These documents describe the function of i.MX6 core board and debug board, and will guide customer to use this board for their product developing.

1.1.1 Audience

This guide is intended to be used by board-level product designers and product software developers. This guide assumes that the reader has a background in computer engineering and/or software engineering and understands concepts of digital system design, microprocessor architecture, Input / Output (I/O) devices and industry standard communication and device interface protocols.

1.1.2 Objective

Some customers want to speed up their product development, and they want to focus on software development only. This Core board can help customer on this. Customers only need to focus on their external device drivers and application development, no need to care about minimal system. It will shorten the time to market.

1.2 MX6D/Q Core board HW User Guide(Pins with Blue Color are on J6 connectors)

1.2.1 Pin Connectors

There are two 40x2 connector on core board:

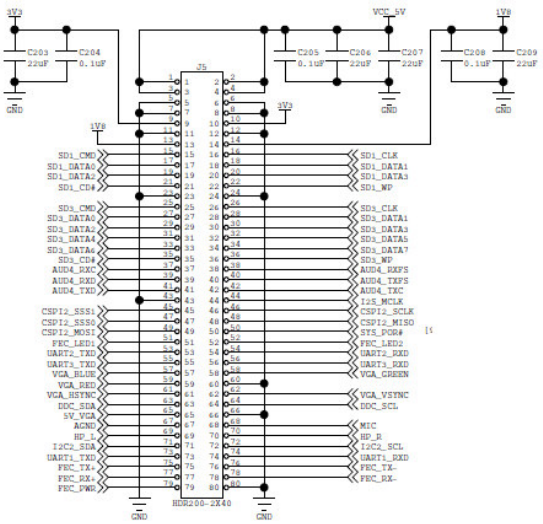

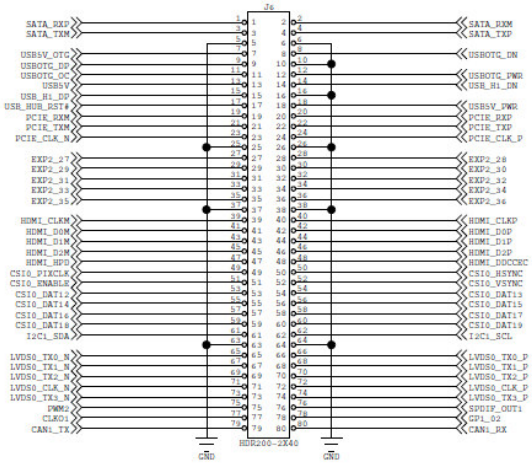

1.2.2 Power

PIN#	Module	Sub Module	PIN Name	Direction	Voltage(V)
1	**POWER**	**5V**	5V_INPUT	INPUT	5

2			5V_INPUT	INPUT	5
3			5V_INPUT	INPUT	5
4			5V_INPUT	INPUT	5
5		**GND**	GND	N/A	0
6			GND	N/A	0
7			GND	N/A	0
8			GND	N/A	0
9		**3.3V**	3V3	OUTPUT	3.3
10			3V3	OUTPUT	3.3
11			GND	N/A	0
12			GND	N/A	0
13		**1.8V**	1V8	OUTPUT	1.8
14			1V8	OUTPUT	1.8

5V: Customer needs provide 3A@5V to the core board, and need to add 5V voltage protection in main board.

3.3V: Core board can provide 2A@3.3V to external device on main board

1.8V: Core board can provide 1A@1.8V to external device on main board

1.2.3 Reset

PIN#	Module	Sub Module	PIN Name	Direction	Voltage(V)
50	RESET	RESET	SYS_POR#	INPUT	3.3

SYS_POR# is an input signal, this pin should be keep 'High(3.3V) when system is running, when this pin is pulled down for 200ms, MX6D/Q will be reset and system will reboot.

1.2.4 Debug UART

PIN#	**Module**	**Sub Module**	**PIN Name**	**Direction**	**Voltage(V)**
73	**Debug UART**	**UART1**	UART1_TXD	OUTPUT	3.3
74			UART1_RXD	INPUT	3.3

This UART Port is reserved for debug purpose; it can print debug message. Customer needs to add an external MX232 chipset for TTL voltage conversion. Below is reference schematic.

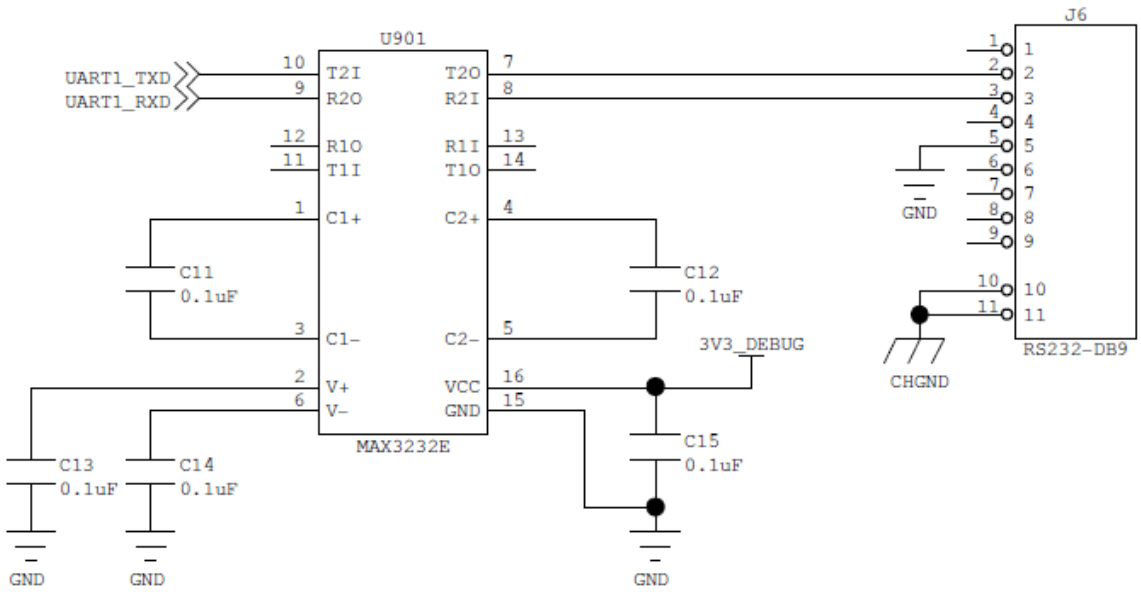

1.2.5 Application UART

PIN#	Module	Sub Module	PIN Name	Direction	Voltage(V)
53	**APP UART**	**UART2**	UART2_TXD	OUTPUT	3.3
54			UART2_RXD	INPUT	3.3
55		**UART3**	UART3_TXD	OUTPUT	3.3
56			UART3_RXD	INPUT	3.3
27	**APP UART(J6)**	**UART4**	**UART4_TXD**	**OUTPUT**	**3.3**
28			**UART4_RXD**	**INPUT**	**3.3**
29		**UART5**	**UART5_TXD**	**OUTPUT**	**3.3**
30			**UART5_RXD**	**INPUT**	**3.3**

This Board has 4 applications UART, UART4 and UART5 are on connector J6, Customer needs to add an external MX232 chipset for TTL voltage conversion. You can refer to reference design above.

1.2.6 CSI

PIN#	Module	Sub Module	PIN Name	Direction	Voltage(V)
49	**CAMERA(J6)**	**CSI0**	**CSI0_PIXCLK**	**OUTPUT**	**3.3**
50			**CSI0_HSYNC**	**OUTPUT**	**3.3**
51			**CSI0_ENABLE**	**OUTPUT**	**3.3**
52			**CSI0_VSYNC**	**OUTPUT**	**3.3**
53			**CSI0_DAT12**	**I/O**	**3.3**
54			**CSI0_DAT13**	**I/O**	**3.3**
55			**CSI0_DAT14**	**I/O**	**3.3**
56			**CSI0_DAT15**	**I/O**	**3.3**
57			**CSI0_DAT16**	**I/O**	**3.3**
58			**CSI0_DAT17**	**I/O**	**3.3**
59			**CSI0_DAT18**	**I/O**	**3.3**
60			**CSI0_DAT19**	**I/O**	**3.3**

This board supports camera input with YUV format; you can connect I2C bus to camera module for configuration. You can use **CLK_Out** to generate MCLK.

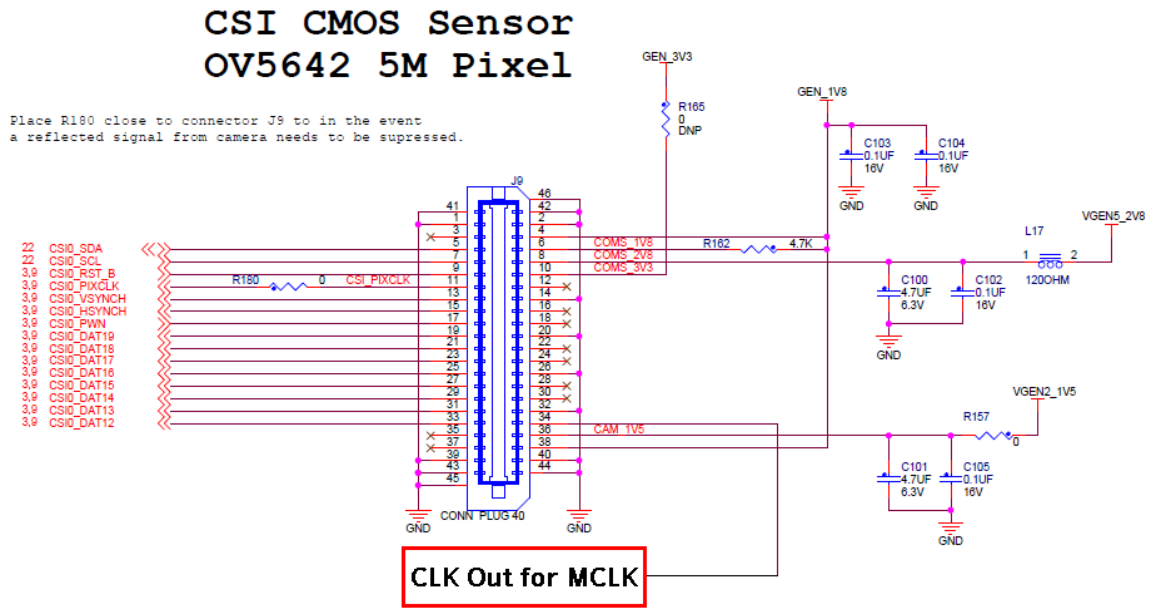

1.2.7 SPI

PIN#	Module	Sub Module	PIN Name	Direction	Voltage(V)
45	**CSPI**	**SPI2**	CSPI2_SSS1	OUTPUT	3.3
46			CSPI2_SCLK	OUTPUT	3.3
47			CSPI2_SSS0	OUTPUT	3.3
48			CSPI2_MISO	INPUT	3.3
49			CSPI2_MOSI	OUTPUT	3.3

This board supports one SPI interface with two chip selects (CSPI2_SSS0 and CSPI2_SSS1), customer can connect two SPI devices to this board.

1.2.8 I2C

PIN#	Module	Sub Module	PIN Name	Direction	Voltage(V)
61	**I2C**	**I2C1(J6)**	**I2C1_SDA**	**I/O**	**3.3**
62			**I2C1_SCL**	**I/O**	**3.3**
71	**I2C**	**I2C2**	I2C2_SDA	I/O	3.3
72			I2C2_SCL	I/O	3.3
31	**I2C**	**I2C3(J6)**	**I2C3_SDA**	**I/O**	**3.3**
32			**I2C3_SCL**	**I/O**	**3.3**
63			DDC_SDA	I/O	5
64			DDC_SCL	I/O	5

This board supports three I2C interfaces, I2C1, I2C2, I2C3, customer can connect different I2C device to these ports. DDC_SDA, DDC_SCL is for VGA EDID info., the voltage is 5V on this I2C port.

1.2.9 VGA

PIN#	Module	Sub Module	PIN Name	Direction	Voltage(V)
57	**TVOUT**	**VGA**	VGA_BLUE	OUTPUT	3.3
58			VGA_GREEN	OUTPUT	3.3
59			VGA_RED	OUTPUT	3.3
60			GND	N/A	0
61			VGA_HSYNC	OUTPUT	5
62			VGA_VSYNC	OUTPUT	5
63			DDC_SDA	I/O	5
64			DDC_SCL	I/O	5
65			5V_VGA	OUTPUT	5
66			GND	N/A	0

These signals are for VGA port, and we have added three filter circuits and I2C level shift on core board for better signal pls refer to below reference design for VGA port.

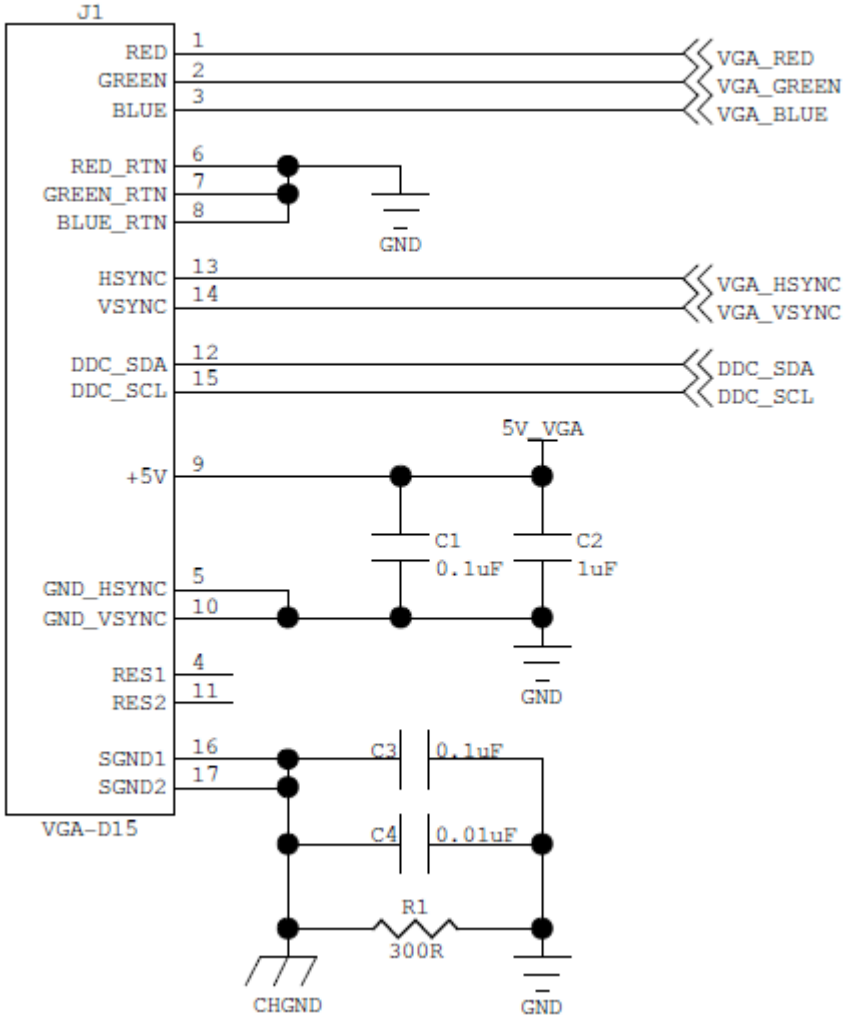

1.2.10 HDMI

PIN#	Module	Sub Module	PIN Name	Direction	Voltage(V)
37	**DISPLAY**	**HDMI**	GND	N/A	0

38			GND	N/A	0
39			HDMI_CLKM	OUTPUT	3.3
40			HDMI_CLKP	OUTPUT	3.3
41			HDMI_D0M	OUTPUT	3.3
42			HDMI_D0P	OUTPUT	3.3
43			HDMI_D1M	OUTPUT	3.3
44			HDMI_D1P	OUTPUT	3.3
45			HDMI_D2M	OUTPUT	3.3
46			HDMI_D2P	OUTPUT	3.3
47			HDMI_HPD	INPUT	3.3
48			HDMI_DDCCEC	INPUT	3.3

This board also supports HDMI output with 3 pair; you can use one of I2C port from I2C1, I2C2, I2C3, Pls find reference below, CM2020 for ESD protection.

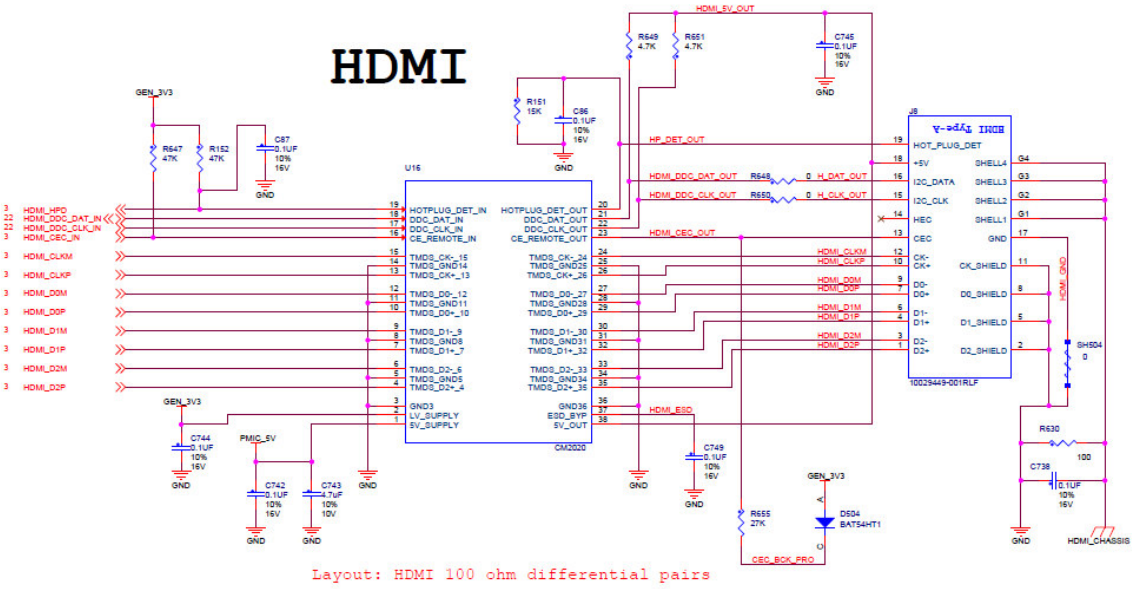

1.2.11 LVDS0

PIN#	Module	Sub Module	PIN Name	Direction	Voltage(V)
64	**LVDS(J6)**	**LVDS0**	GND	N/A	0
65			LVDS0_TX0_N	OUTPUT	3.3
66			LVDS0_TX0_P	OUTPUT	3.3
67			LVDS0_TX1_N	OUTPUT	3.3
68			LVDS0_TX1_P	OUTPUT	3.3
69			LVDS0_TX2_N	OUTPUT	3.3
70			LVDS0_TX2_P	OUTPUT	3.3
71			LVDS0_CLK_N	OUTPUT	3.3
72			LVDS0_CLK_P	OUTPUT	3.3
73			LVDS0_TX3_N	OUTPUT	3.3
74			LVDS0_TX3_P	OUTPUT	3.3

This Port Supports LVDS with 4 pairs. Customer needs to add backlight circuit on main board, also can use PWM for backlight adjustment. And for touch panel, you can add interrupt signal and i2C for touch data reading.

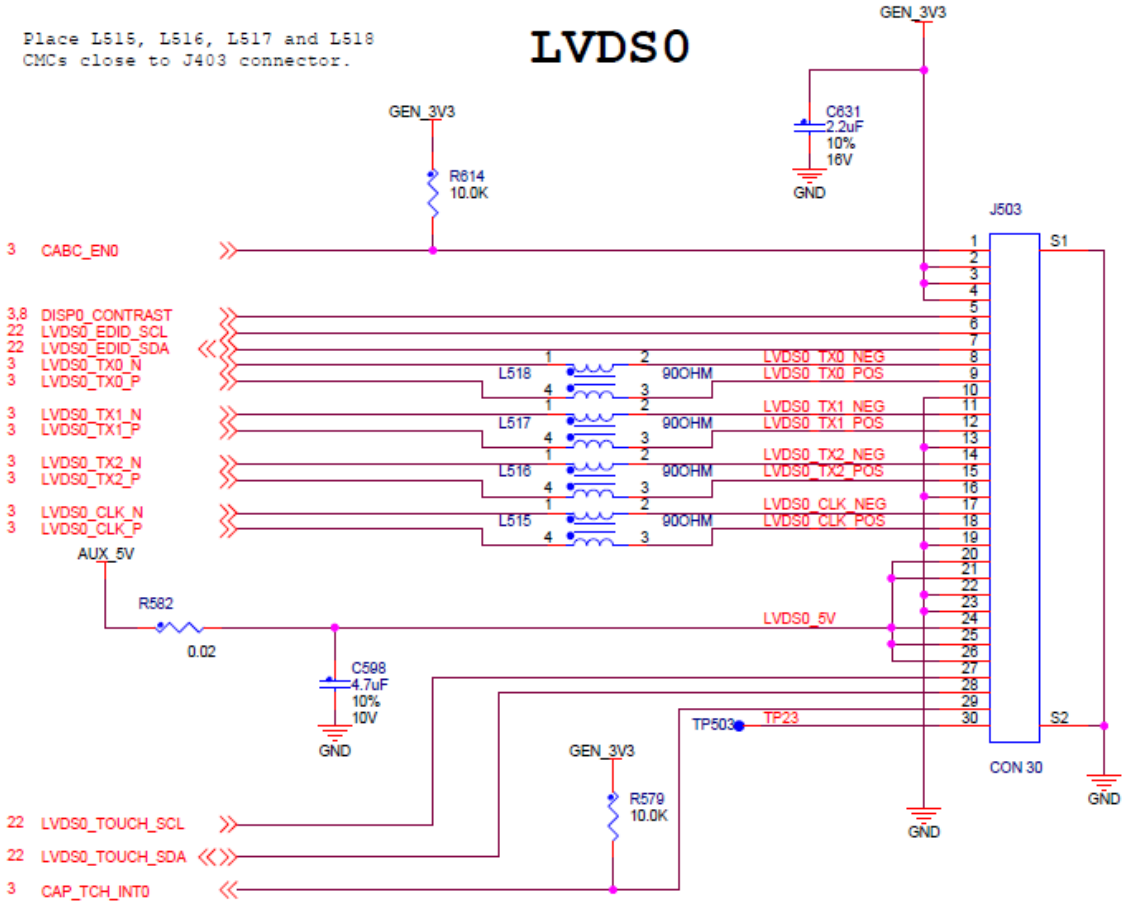

1.2.12 LVDS1

This board also supports second LVDS, it has same interface to LVDS0, these pins are muxed to others function, this port can be used for 2nd LVDS or dual- channel LVDS.

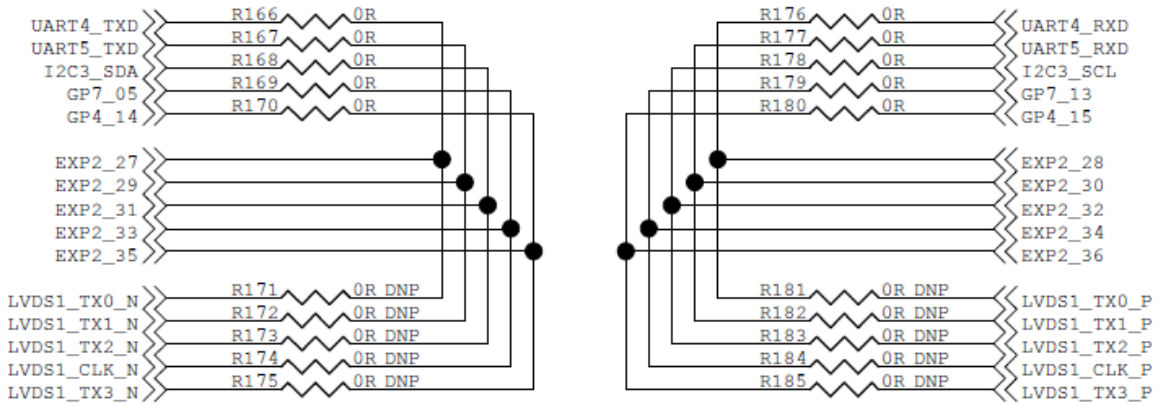

1.2.13 GPIO

PIN#	Module	Sub Module	PIN Name	Direction	Voltage(V)
33	GPIO(J6)	GPIO7	GP7_11	I/O	3.3
34			GP7_13	I/O	3.3
35		GPIO4	GP4_14	I/O	3.3
36			GP4_15	I/O	3.3

There are 4 GPIO point port by default, but you can config more pins for GPIO function, such as, UART, SPI, I2C, etc if you don't need those functions. So you can more than 15 GPIOs.

1.2.14 SATA

PIN#	Module	Sub Module	PIN Name	Direction	Voltage(V)
1	SATA(J6)	SATA	SATA_RXP	INPUT	2.5
2			SATA_RXM	INPUT	2.5
3			SATA_TXM	OUTPUT	2.5
4			SATA_TXP	OUTPUT	2.5

This board support SATA interface, Customer needs to supply SATA power on main board for high power consumption:

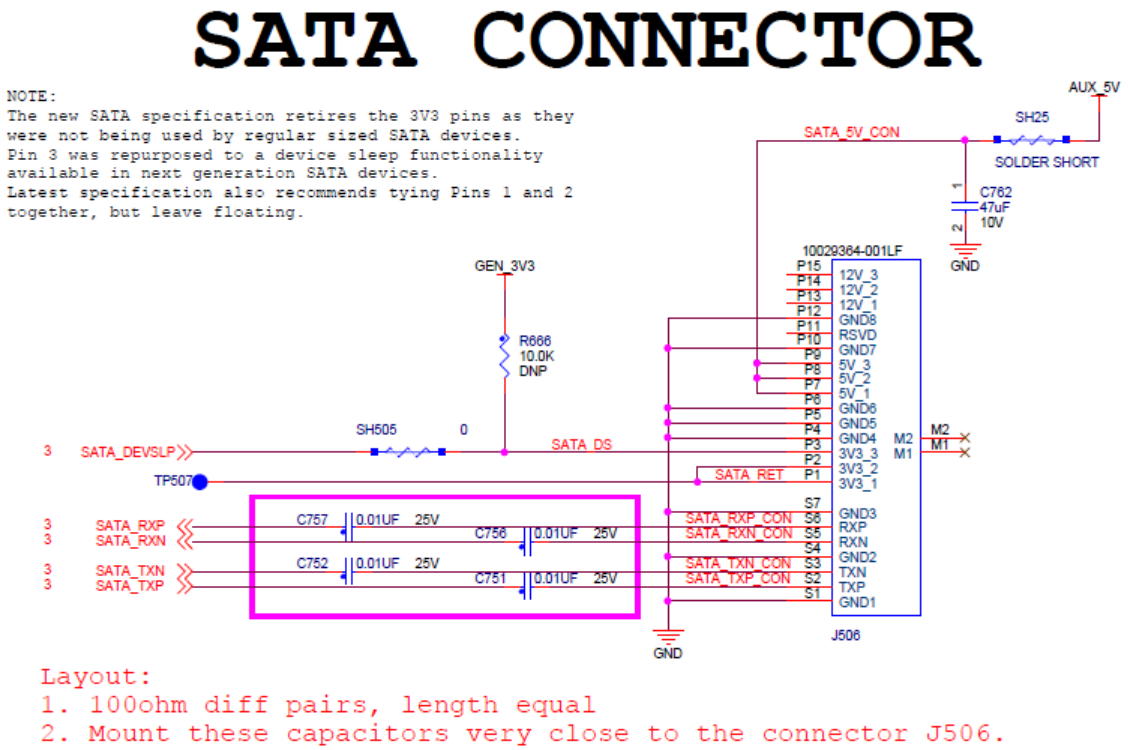

1.2.15 Ethernet

PIN#	Module	Sub Module	PIN Name	Direction	Voltage(V)
75	**ETHERNET**	**FEC**	FEC_TX+	OUTPUT	3.3
76			FEC_TX-	OUTPUT	3.3
77			FEC_RX+	INPUT	3.3
78			FEC_RX-	INPUT	3.3
79			FEC_PWR	OUTPUT	3.3

This board already has a 10/100M Ethernet PHY, so, customer can place an Ethernet connector with transformer on main board.

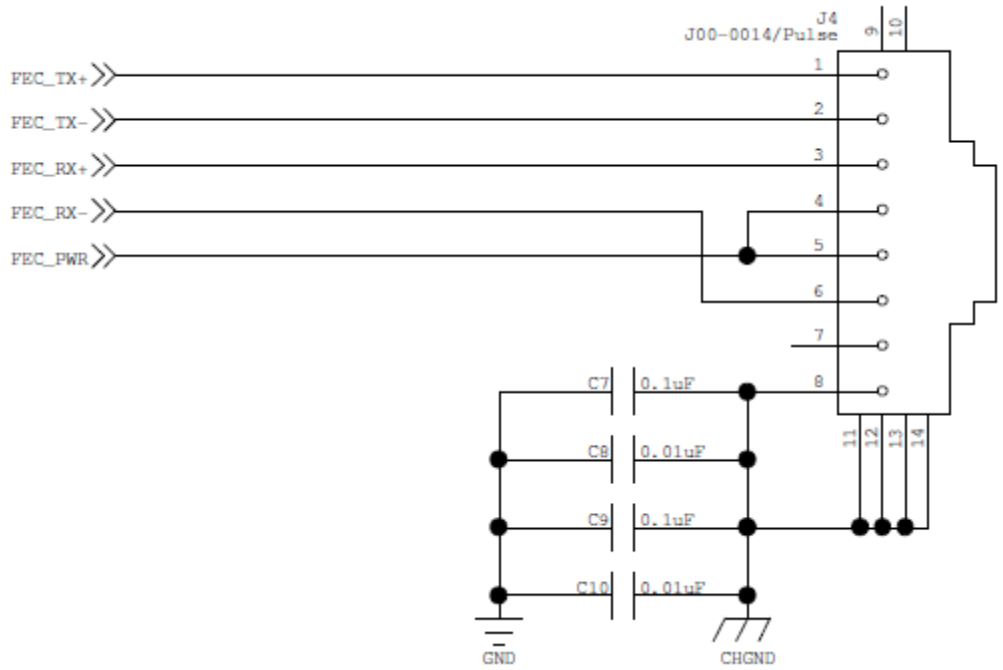

1.2.16 PWM

PIN#	Module	Sub Module	PIN Name	Direction	Voltage(V)
75	PWM(J6)	PWM2	PWM2	OUTPUT	3.3

This is a PWM pin on core board; customer can use it to control backlight.

1.2.17 CAN

PIN#	Module	Sub Module	PIN Name	Direction	Voltage(V)
79	CAN BUS(J6)	CAN1	CAN1_TX	OUTPUT	3.3
80			CAN1_RX	INPUT	3.3

There is a CAN bus interface on this board

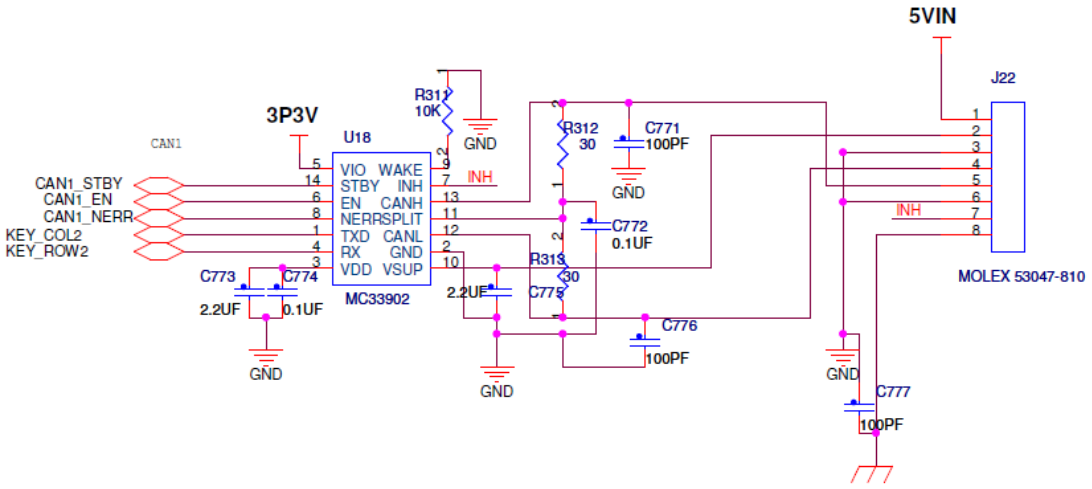

1.2.18 Audio

PIN#	Module	Sub Module	PIN Name	Direction	Voltage(V)
67	**Analog AUDIO**	**MIC phone**	AGND	N/A	0
68			MIC	INPUT	N/A
69		**Headphone**	HP_L	OUTPUT	N/A
70			HP_R	OUTPUT	N/A

It can support Stereo Audio output and MIC Phone,

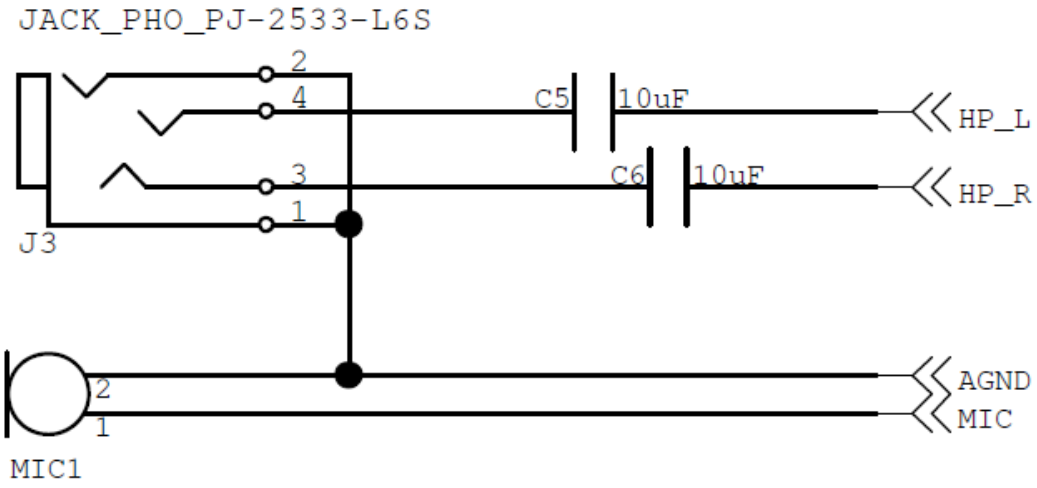

1.2.19 PCIE

PIN#	Module	Sub Module	PIN Name	Direction	Voltage(V)
19	PCIE(J6)	PCIE	PCIE_RXM	INPUT	3.3
20			PCIE_RXP	INPUT	3.3
21			PCIE_TXM	OUTPUT	3.3
22			PCIE_TXP	OUTPUT	3.3
23			PCIE_CLK_N	OUTPUT	3.3
24			PCIE_CLK_P	OUTPUT	3.3
25			GND	N/A	0
26			GND	N/A	0

This board support PCIE interface, customer can use it for PCIE 3G Modem, PCIE WIFI Module, PCIE 1000M network, PCIE USB 3.0 converter card.

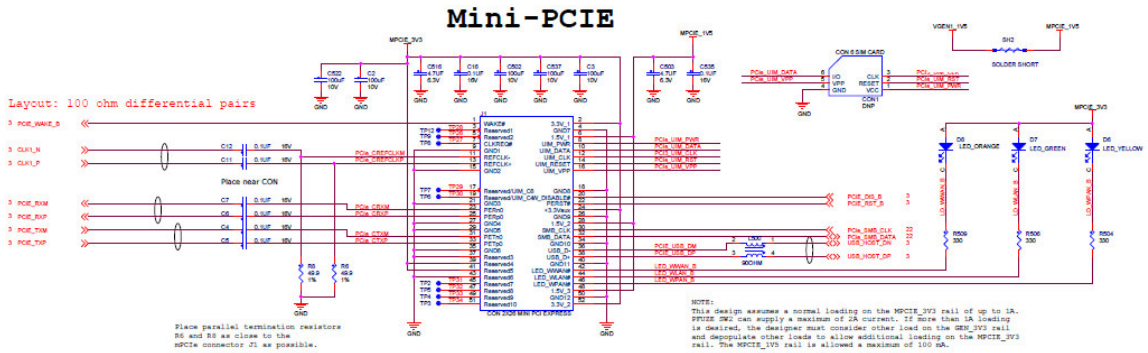

1.2.20 SDHC

PIN#	Module	Sub Module	PIN Name	Direction	Voltage(V)
15	**SDHC**	**SDHC1**	SD1_CMD	I/O	3.3
16			SD1_CLK	OUTPUT	3.3
17			SD1_DATA0	I/O	3.3
18			SD1_DATA1	I/O	3.3
19			SD1_DATA2	I/O	3.3
20			SD1_DATA3	I/O	3.3
21			SD1_CD#	INPUT	3.3
22			SD1_WP	INPUT	3.3
23			GND	N/A	0
24			GND	N/A	0
25		**SDHC3**	SD3_CMD	I/O	3.3
26			SD3_CLK	OUTPUT	3.3
27			SD3_DATA0	I/O	3.3
28			SD3_DATA1	I/O	3.3
29			SD3_DATA2	I/O	3.3
30			SD3_DATA3	I/O	3.3
31			SD3_DATA4	I/O	3.3
32			SD3_DATA5	I/O	3.3
33			SD3_DATA6	I/O	3.3
34			SD3_DATA7	I/O	3.3
35			SD3_CD#	INPUT	3.3
36			SD3_WP	INPUT	3.3

There are two SDHC interfaces, one is 4 bit , another one is 8 bit, customer can connect it to full size SD card socket, or TF card, and they can connect it SDIO WIFI module or GPS module.

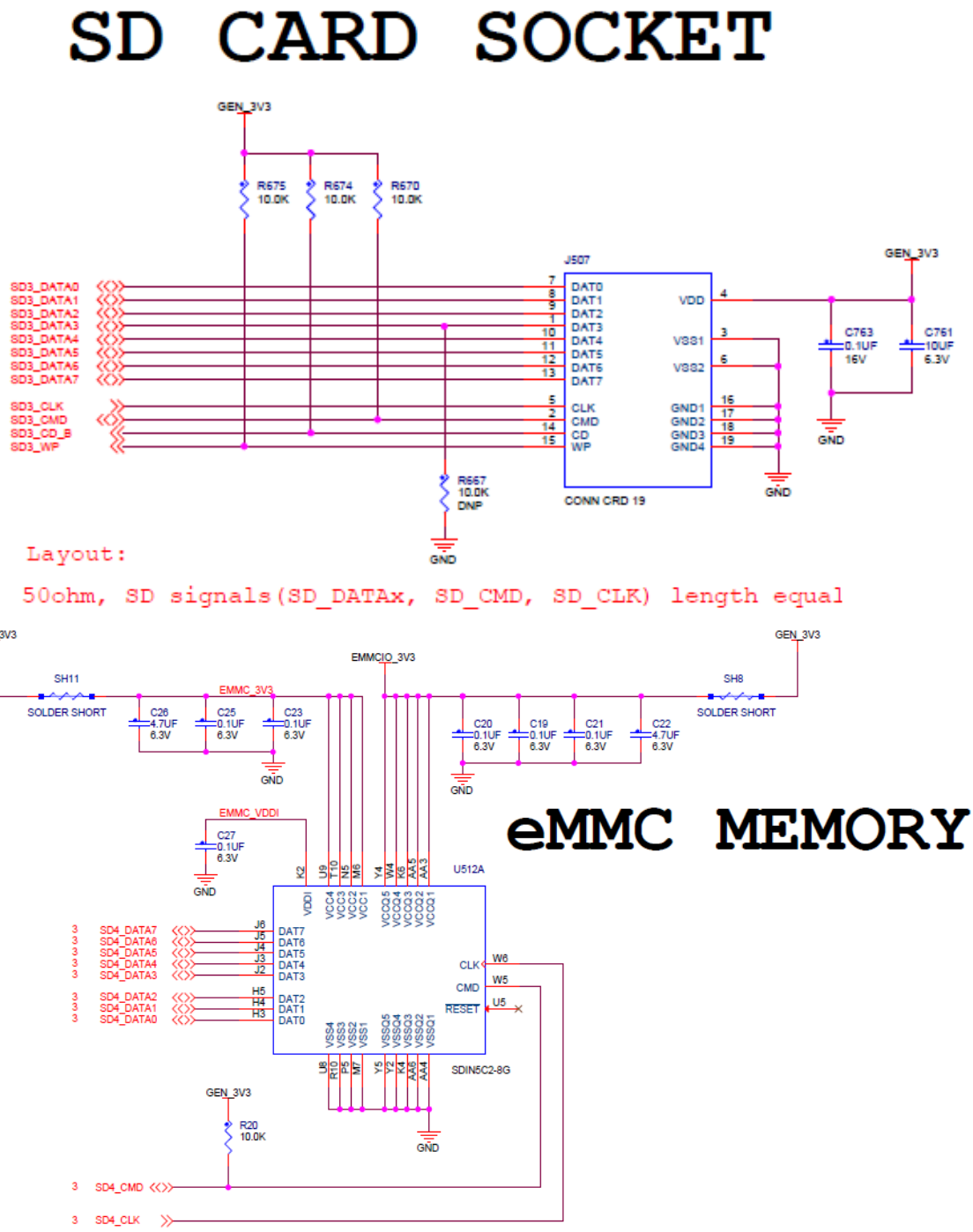

1.2.21 Clock Out

PIN#	Module	Sub Module	PIN Name	Direction	Voltage(V)
77	CLK OUT(J6)	CLKO1	CLKO1	OUTPUT	3.3
78		CLKO2	CLKO2	OUTPUT	3.3

This board has two CLK Out pins for external device.

1.2.22 USB OTG

PIN#	Module	Sub Module	PIN Name	Direction	Voltage(V)
6	USB(J6)	OTG	GND	N/A	0
7			USB5V_OTG	INPUT	5
8			USBOTG_DN	I/O	5
9			USBOTG_DP	I/O	5
10			GND	N/A	0
11			USBOTG_OC	INPUT	5
12			USBOTG_PWR	OUTPUT	5

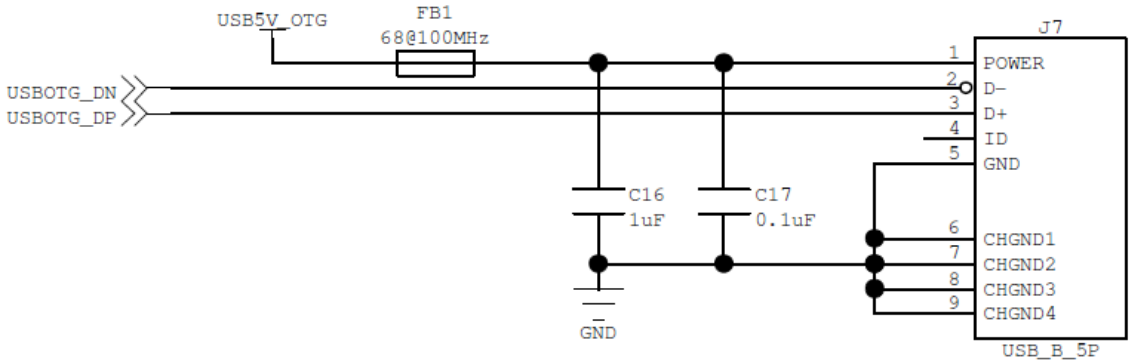

1.2.23 USB HOST

PIN#	Module	Sub Module	PIN Name	Direction	Voltage(V)
13	USB HOST(J6)	USB HOST	USB5V	INPUT	5
14			USB_H1_DN	I/O	5
15			USB_H1_DP	I/O	5
16			GND		0
17			USB_HUB_RST#	I/O	3.3
18			USB5V_PWR	INPUT	5

1.2.24 I2S

PIN#	Module	Sub Module	PIN Name	Direction	Voltage(V)
37	AUDIO(J6)	I2S	AUD4_RXC	INPUT	3.3
38			AUD4_RXFS	INPUT	3.3
39			AUD4_RXD	INPUT	3.3
40			AUD4_TXFS	INPUT	3.3
41			AUD4_TXD	OUTPUT	3.3
42			AUD4_TXC	INPUT	3.3
43			GND	N/A	0
44			I2S_MCL	OUTPUT	3.3