Document Number: FRDM-LS1012AGSG
Rev. 2, 07/2016

QorIQ FRDM-LS1012A board Getting Started Guide

Contents

1 Introduction..... 1
2 Related documentation.....1
3 Hardware kit contents.....2
4 FRDM-LS1012A block diagram.....2
5 FRDM-LS1012A top view.....3
6 Connectors.....4
7 Power-monitoring LEDs.....5
8 Reset and configuration signals.....5
9 Prerequisites..... 7
10 Booting FRDM-LS1012A.....7
11 Flash image layout.....12
12 Ethernet port map.....12
13 Enable Packet Forwarding Engine (PFE) Ethernet..... 12
14 Updating FRDM-LS1012A board images.....13
15 Troubleshooting.....14
16 Revision history..... 14

1 Introduction

The QorIQ LS1012A FRDM-LS1012A board is an ultra-low-cost development platform for LS1012A.

This document describes the FRDM-LS1012A and the basic board operations in a step-by-step manner. This document describes the settings required to connect switches, connectors, push buttons, and LEDs to the peripheral devices.

2 Related documentation

The following table lists the additional documents that you can refer to, for more information about the FRDM-LS1012A.

Some of these documents may be available only under a non-disclosure agreement (NDA). To request access to these documents, contact your local NXP field applications engineer or sales representative.

Table 1. Related documentation

Document	Description
QorIQ FRDM-LS1012A	Explains the FRDM-LS1012A interfaces and configuration.

Table continues on the next page...

Table 1. Related documentation (continued)

Document	Description
board Reference Manual	
FRDM-LS1012A Errata	Lists and describes all known errata for the FRDM-LS1012A. It also describes the available workaround for each errata and their detailed explanation, where necessary.
QorIQ LS1012A Reference Manual	Provides a detailed description of the LS1012A processor and its features, such as memory mapping, interfaces, chip features, and clock information.
QorIQ LS1012A Data Sheet	Contains the LS1012A information on pin assignments, electrical characteristics, package information, and ordering information.
QorIQ LS1012A Chip Errata	Lists the details of all known silicon errata for the LS1012A.
QorIQ LS1012A Design Checklist, AN5192	This document provides recommendations for new designs based on the LS1012A. This document can also be used to debug newly-designed systems by highlighting those aspects of a design that merit special attention during initial system start-up.
QorIQ LS1012A SDK documentation	This document explains the Linux SDK for LS1012A, supporting LS1012A processor on the FRDM-LS1012A. The document is available at: https://freescale.sdlproducts.com/LiveContent/content/en-US/LS1012A%20Offtrain%20SDK%20Release/GUID-A28BC8F6-E92D-42B0-BFAB-297A2052FEBD

3 Hardware kit contents

The FRDM-LS1012A kit includes:

- FRDM-LS1012A hardware
- Y-type, type-A to micro-B USB cable
- Quick Start Guide

4 FRDM-LS1012A block diagram

Figure 1 shows the FRDM-LS1012A block diagram.

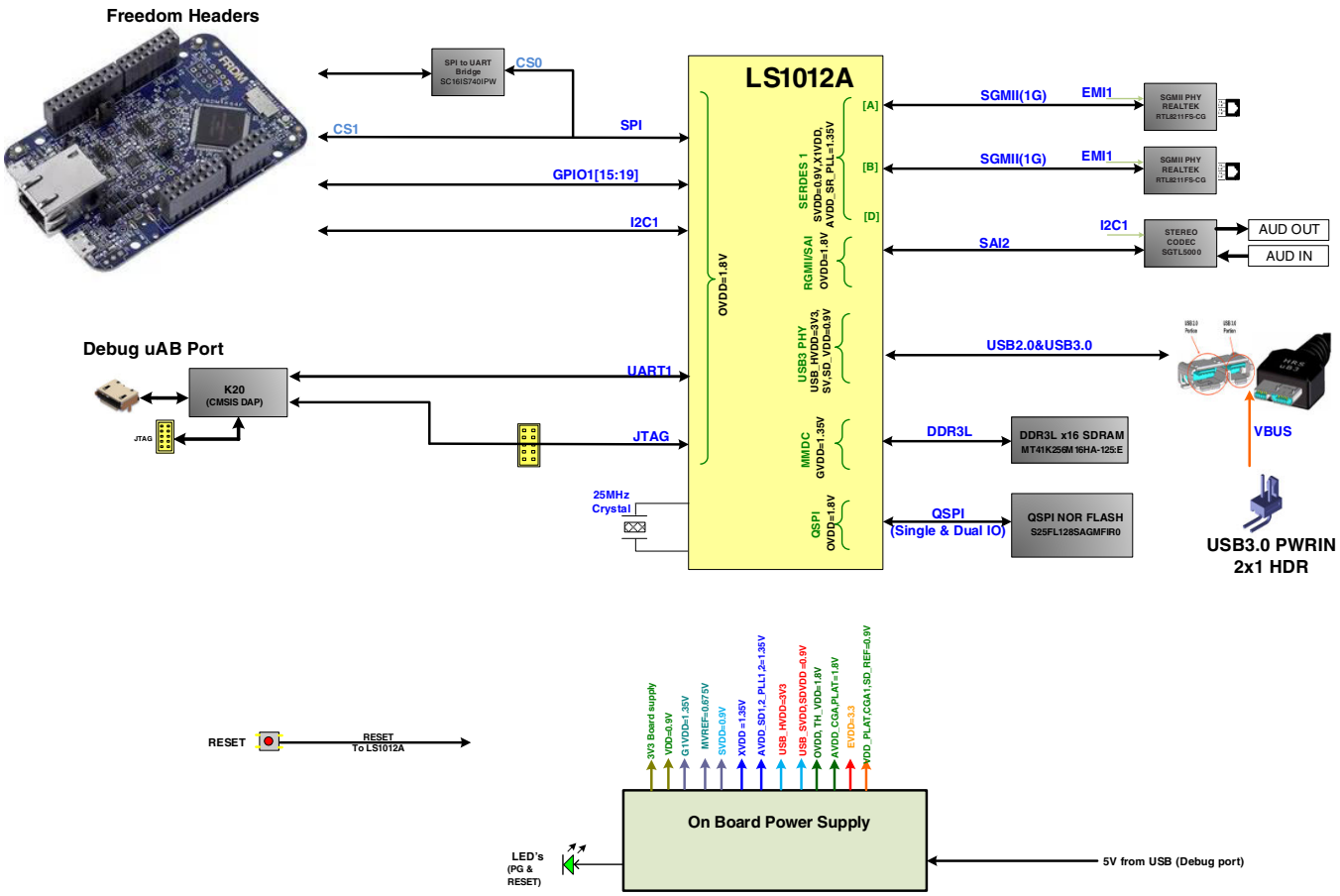

Figure 1. FRDM-LS1012A block diagram

5 FRDM-LS1012A top view

The following figure shows the top view of the FRDM-LS1012A.

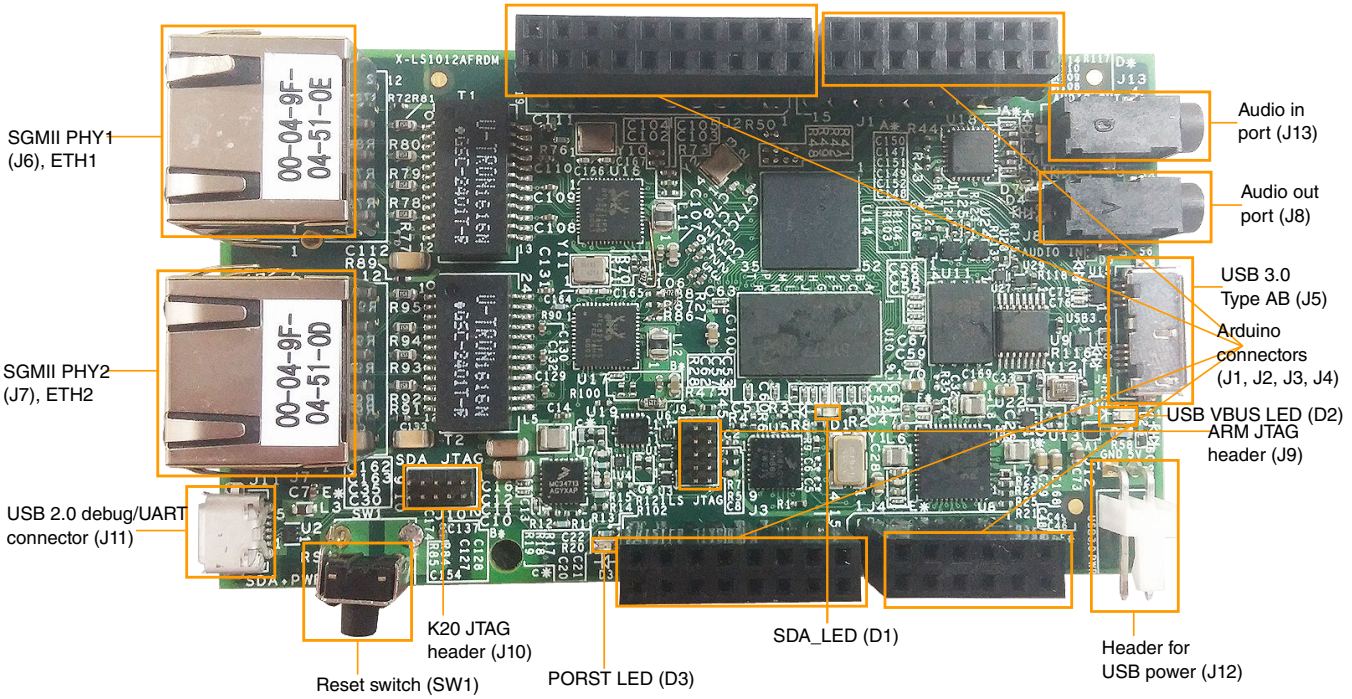

Figure 2. FRDM-LS1012A top view

6 Connectors

This table lists the connectors available on the board. FRDM-LS1012A top view shows the placement of connectors on the FRDM-LS1012A.

Table 2. Connectors

Connector	Description	Connector type	Connection details
J11	USB 2.0 debug connector	5-pin Micro AB connector	Provides 5 V power supply to the board and CMSIS DAP debug support. This also provides UART for console messages.
SW1	Reset switch	4-pin On/Off switch	Resets all the device on board.
J6	Ethernet connector (ETH1)	RJ45 port	SGMII PHY1
J7	Ethernet connector (ETH2)	RJ45 port	SGMII PHY2
J1, J2, J3, J4	Arduino connectors	J1 - 2x8-pin connector J2 - 2x10-pin connector J3 - 2x8-pin connector J4 - 2x6-pin connector	Connects to Arduino board
J10	K20 JTAG header	2x5-pin header	Debug port for K20 (CMSIS DAP MCU)
J9	ARM JTAG header	2x5-pin header	JTAG debug port for LS1012A.

Table continues on the next page...

Table 2. Connectors (continued)

J12	Header for USB power	2-pin header	Provides 5 V power supply to USB2.0/3.0 port of FRDM-LS1012A
J5	USB 3.0 Type AB connector	10-pin Micro AB connector	USB2.0/3.0 port of FRDM-LS1012A
J8	Audio out port		SAI2 audio codec stereo output port
J13	Audio in port		SAI2 audio codec stereo input port

7 Power-monitoring LEDs

The board includes LEDs, for power or reset monitoring, which inform the user about the status of different power rails, resets, and board faults. The FRDM-LS1012A LEDs are listed in the following table.

Table 3. FRDM-LS1012A LEDs

LED legend	Description (when LED is ON)	Reference designator	LED color
USB VBUS ON	Indicates that USB 5 V power is available on the connector	D2	Green
SDA_LED	Indicates SDA (K20) is active	D1	Green
PORST	DUT is in reset (PORESET is asserted)	D3	Red

8 Reset and configuration signals

The reset sequence can be triggered from various sources.

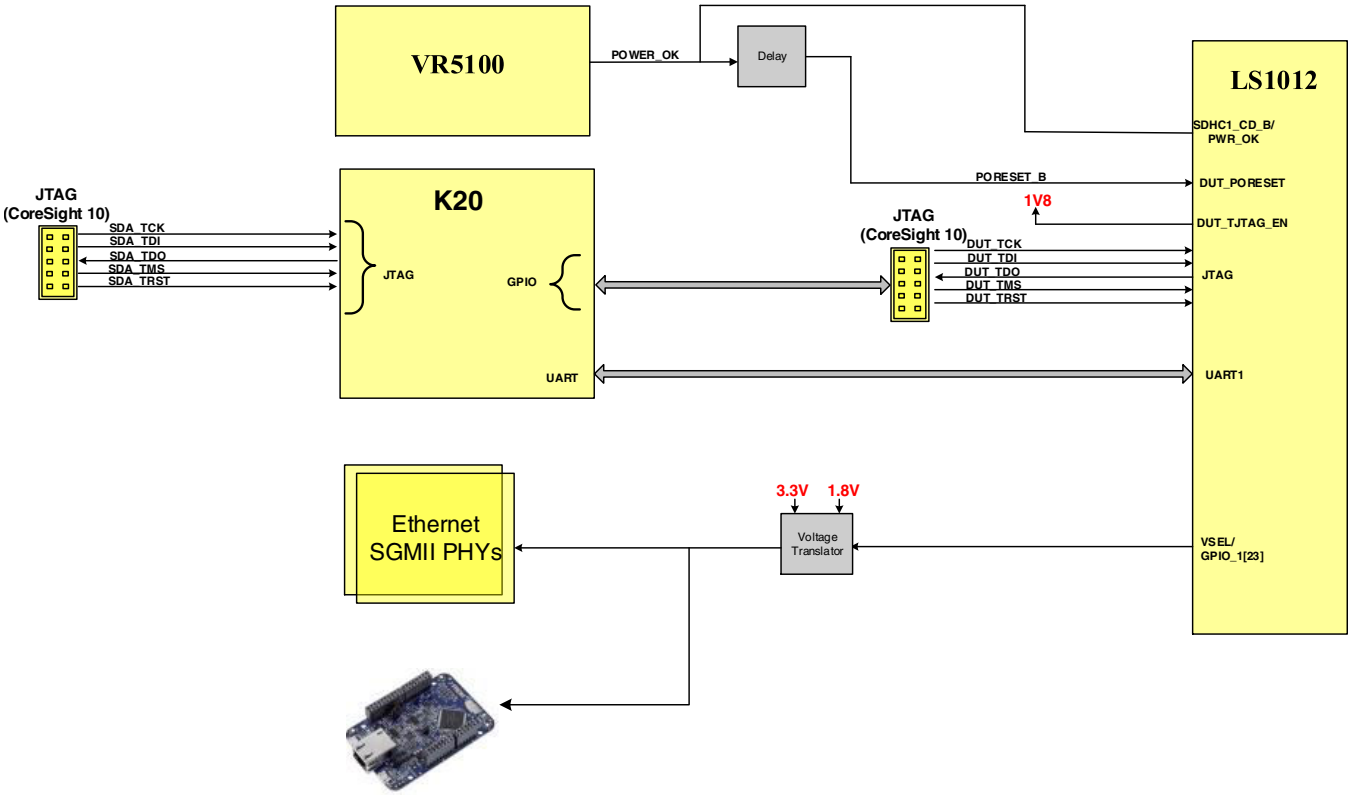

Figure 3. FRDM-LS1012A reset architecture

Table 4 summarizes the reset activity.

Table 4. Reset activity

Reset Source	Reset Reason	Actions taken
Power ON	Initialization after a power cycle.	All the onboard devices are reset after a power cycle. PLL and clock circuitry initialize to the default configuration.
SW1	Reset switch	Resets LS1012A and other board peripherals. Enables the BOOTLOADER mode on the K20 CMSISDAP.
Debugger reset (J9 and K20)	Reset from JTAG debugger	No power cycle. All devices are reset.
RESET_REQ_B	Reset request from LS1012A	All devices are reset. No power cycle.

The reset is asserted for about 240 ms after all power supplies are stable. This is to meet the LS1012A 100 ms reset specification. Power failure after system operation also asserts the reset to all the devices on the board. The FRDM-LS1012A supports options to change the PORCFG through the resistor mount option. Mount the resistors to drive the corresponding PORCFG as low in Table 5.

Table 5. Configuration signals

Configuration signal	Nets sampled	Components on board
CFG_ENG_USE2	QSPI_A_DATA0	R35
CFG_ENG_USE	UART1_SOUT	R49
CFG_RCW_SRC1	CLK_OUT	R50

9 Prerequisites

To set up your FRDM-LS1012A, you will need:

Table 6. Prerequisites

Items	Description
Hardware	
Type-A to micro-B USB cable [available with kit]	It is recommended to use a Y-type, type-A to micro-B USB cable to power the FRDM-LS1012A from two USB host ports. This doubles the current capacity from host and provides high power for specific use cases, such as USB 3.0 host or OTG device-A mode
CodeWarrior TAP [optional]	Used to debug LS1012A
Molex 22-01-2027 or equivalent crimp housing connector [optional]	This connector is used to provide 5 V VBUS power supply through the onboard 2-pin header, J12, and use the FRDM-LS1012A in the USB 3.0 host or OTG device-A mode
Power adaptor [optional]	Power supply adaptor that can be connected to crimp housing connector to provide 5V supply
Ethernet cable [optional]	Used to connect the board to network and get updated software for the board
Software	
mbed Windows serial port driver	Download the mbed Windows serial port driver from:https://developer.mbed.org/handbook/Windows-serial-configuration
Serial terminal emulator	Install a serial terminal emulator, such as Tera Term to control and monitor the FRDM-LS1012A from the serial console.
TFTP server	Download and install a TFTP server.
LS1012A latest release images	Download the latest release images from the following location. In this document, we are providing steps for updating prebuilt images <LS1012A-SDK-AARCH64-IMAGE-YYYYMMDD-yocto> on the board. https://freescale.sdlproducts.com/LiveContent/content/en-US/LS1012A%20Offtrain%20SDK%20Release/GUID-A28BC8F6-E92D-42B0-BFAB-297A2052FEBD **NOTE:** • The source ISO contains the package source tarballs and yocto recipes. It can be installed and used to do non-cache build. • The cache ISO contains the pre-built cache binaries. To avoid a long build time, you can install the source ISO and the cache ISO in the same installation folder. • The image ISO includes all prebuilt images: flash images, standalone toolchain installer, HD rootfs images and small images. • The source ISO can be used separately. The core ISO and the source ISO should work together.

10 Booting FRDM-LS1012A

Ensure that you have met the Prerequisites and follow these steps to boot the board:

1. Plug the type-A connectors of the Y-type type-A to micro-B cable into the two USB ports of your PC.
2. Connect the type-B connector of the cable to the USB 2.0 debug/UART connector (J11).

It is recommended to use the Y-type type-A to micro-B cable due to the higher power requirements in some use cases.

NOTE

For power analysis, refer to the *FRDM-LS1012A Reference Manual*.

NOTE

Your PC will automatically install the USB driver and detect the USB device.

The board will turn on. The Red PORST LED (D3) will turn on and turn off immediately. And, the green SDA LED (D1) will turn on.

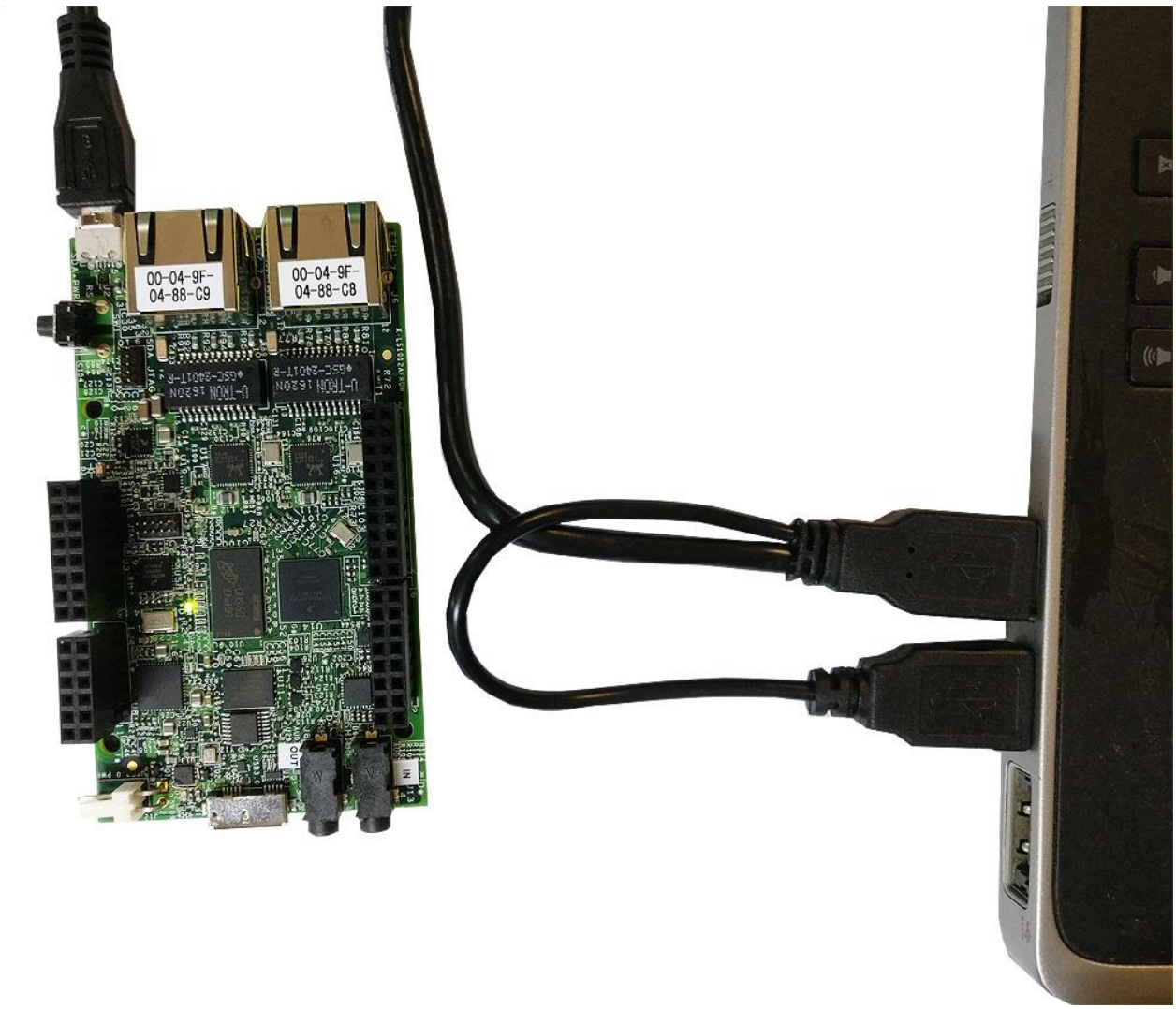

Figure 4. Connect USB cable

3. Install the mbed Windows serial port driver that you downloaded, as described in the Prerequisites section.

NOTE

This is a one time activity, please ignore if you have already installed mbed driver on your system (PC or laptop).

4. Optionally, if you want to use the FRDM-LS1012A in the USB 3.0 host or OTG device-A mode, you need to provide the 5V VBUS power supply through the onboard 2-pin header, J12.
   Use Molex 22-01-2027 or equivalent crimp housing connector to connect J12 with the 5 V power supply.

NOTE

To avoid any irreparable damage to the board, it is extremely important to connect the proper polarity at J12. Use a multi-meter to verify the 5 V and GND terminals of the power supply and make connections, as shown in the figure below.

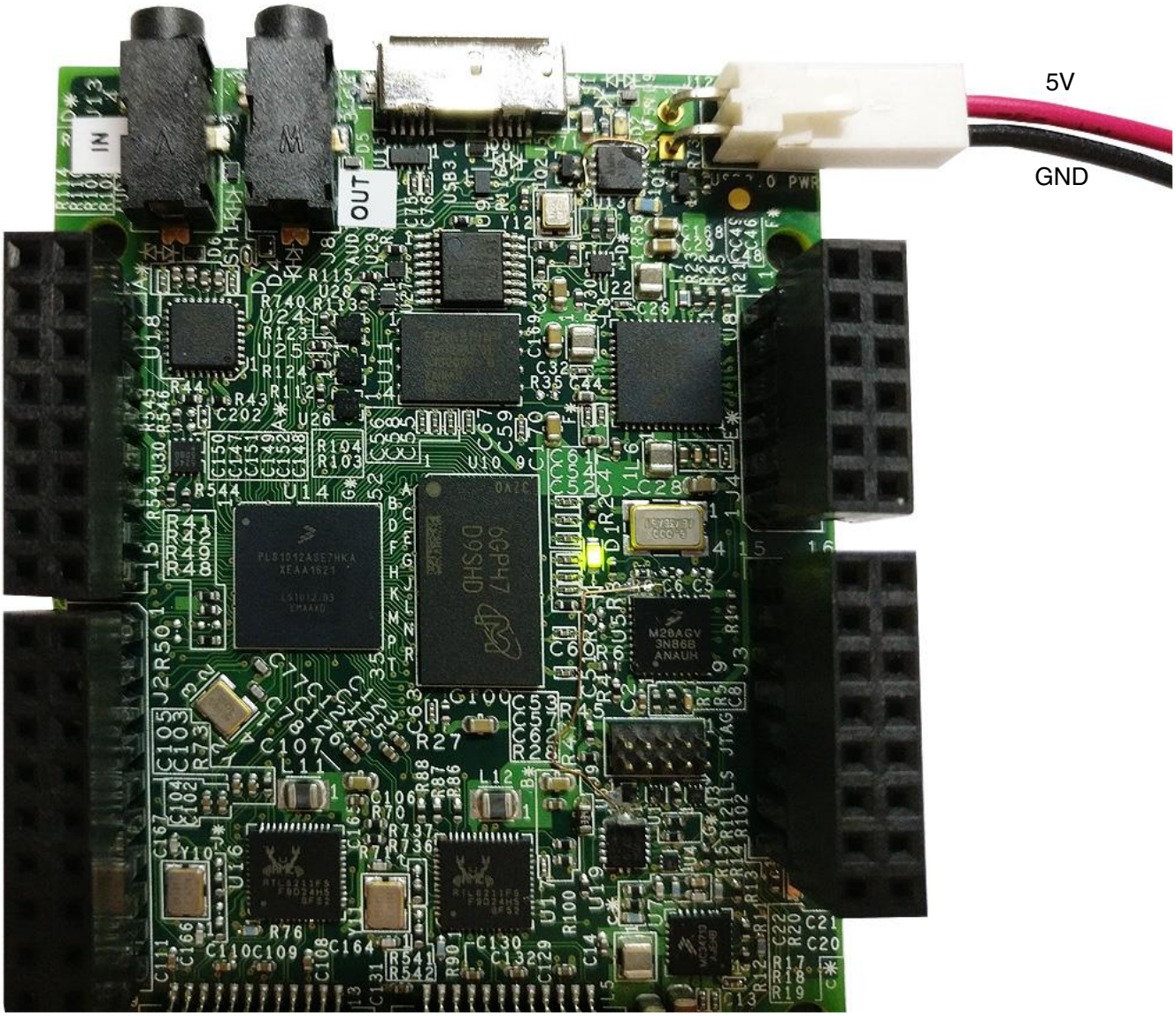

Figure 5. Connect 5 V power supply to J12

5. Optionally, if required, connect the CodeWarrior TAP to the FRDM-LS1012A on ARM JTAG header (J9). The FRDM-LS1012A also contains an onboard low speed debugger (CMSIS-DAP) accessible through the USB 2.0 debug/ UART Connector (J11).
6. Optionally, connect the Ethernet cable if you want to connect your board to the network, for example, for obtaining latest board software and updating board images.

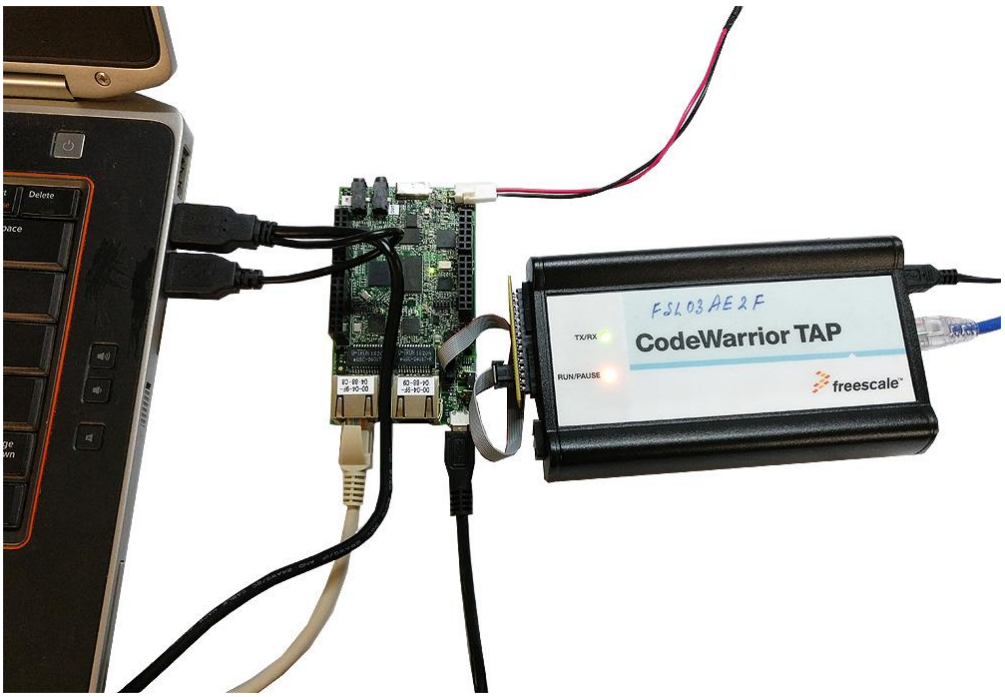

Figure 6. FRDM-LS1012A connections

7. Execute Tera Term.
8. Select the **Serial** option in Tera Term and ensure that **mbed serial port** is selected.
9. Click **OK**.
10. Select **Setup > Serial port** and configure the host computer's serial port with the following settings:
    - Baud rate: 115200 bit/s
    - Number of data bits: 8
    - Stop bit: 1
    - Parity: None
    - Flow control: None
11. Click **OK**.
12. Press the Reset switch (SW1) and the board boots up. The PORST red LED D3 turns on momentarily and switches off.

NOTE

See Power-monitoring LEDs for details about LEDs.

The console shows the U-Boot messages as illustrated below.

```
U-Boot 2016.01-g429bc42 (Jul 01 2016 - 05:08:11 +0530)

SoC:  LS1012AE (0x87040010)
Clock Configuration:
       CPU0(A53):800  MHz
       Bus:      250  MHz  DDR:      1000 MT/s
Reset Configuration Word (RCW):
       00000000: 08000008 00000000 00000000 00000000
       00000010: 33050000 c000000c 40000000 00001800
       00000020: 00000000 00000000 00000000 000c4571
       00000030: 00000000 00c28120 00000096 00000000
I2C:   ready
DRAM:  510 MiB
MMU warning: gd->secure_ram is not maintained, disabled.
Using SERDES1 Protocol: 13061 (0x3305)
SF: Detected S25FS512S_256K with page size 512 Bytes, erase size 128 KiB,
total
                                    64 MiB
```

```
In:    serial
Out:   serial
Err:   serial
Model: LS1012A FREEDOM Board
Board: LS1012AFRDM Net:   cbus_baseaddr: 0000000004000000, ddr_baseaddr:
0000000
                                    083800000, ddr_phys_baseaddr: 03800000
class init complete
tmu init complete
bmu1 init: done
bmu2 init: done
GPI1 init complete
GPI2 init complete
HGPI init complete
hif_tx_desc_init: Tx desc_base: 0000000083e40400, base_pa: 03e40400,
desc_count:
                                         64
hif_rx_desc_init: Rx desc base: 0000000083e40000, base_pa: 03e40000,
desc_count:
                                         64
HIF tx desc: base_va: 0000000083e40400, base_pa: 03e40400
HIF init complete
bmu1 enabled
bmu2 enabled
pfe_hw_init: done
pfe_firmware_init
pfe_load_elf: no of sections: 13
pfe_firmware_init: class firmware loaded
pfe_load_elf: no of sections: 10
pfe_firmware_init: tmu firmware loaded
ls1012a_configure_serdes 0
ls1012a_configure_serdes 1
pfe_eth0, pfe_eth1
Hit any key to stop autoboot:  0
Stopping PFE...
SF: Detected S25FS512S_256K with page size 512 Bytes, erase size 128 KiB,
total
                                    64 MiB
device 0 offset 0xa00000, size 0x2800000
SF: 41943040 bytes @ 0xa00000 Read: OK
## Loading kernel from FIT Image at 96000000 ...
   Using 'config@1' configuration
   Trying 'kernel@1' kernel subimage
     Description:  ARM64 Linux kernel
     Type:         Kernel Image
     Compression:  uncompressed
     Data Start:   0x960000dc
     Data Size:    12482048 Bytes = 11.9 MiB
     Architecture: AArch64
     OS:           Linux
     Load Address: 0x80080000
     Entry Point:  0x80080000
## Loading ramdisk from FIT Image at 96000000 ...
   Using 'config@1' configuration
   Trying 'ramdisk@1' ramdisk subimage
     Description:  LS2 Ramdisk
     Type:         RAMDisk Image
     Compression:  uncompressed
     Data Start:   0x96bea0b0
     Data Size:    28138092 Bytes = 26.8 MiB
     Architecture: AArch64
     OS:           Linux
     Load Address: unavailable
     Entry Point:  unavailable
## Loading fdt from FIT Image at 96000000 ...
   Using 'config@1' configuration
   Trying 'fdt@1' fdt subimage
     Description:  Flattened Device Tree blob
     Type:         Flat Device Tree
     Compression:  uncompressed
```

```
        Data Start:   0x96be7790
        Data Size:    10396 Bytes = 10.2 KiB
        Architecture: AArch64
      Loading fdt from 0x96be7790 to 0x90000000
      Booting using the fdt blob at 0x90000000
      Loading Kernel Image ... OK
      Using Device Tree in place at 0000000090000000, end 000000009000589b

    Starting kernel ...
```

13. Enter `root` as password at the board login prompt, to login to the board.

11 Flash image layout

The following table shows the FRDM-LS1012A QSPI flash image layout. QSPI is the only boot option available on the FRDM-LS1012A.

Table 7. Flash image layout

Start address	End address	Image	Maximum size
0x4000_0000	0x400F_FFFF	RCW + PBI	1 MB
0x4010_0000	0x400F_FFFF	U-boot boot loader + PFE binary	1 MB
0x4020_0000	0x401F_FFFF	U-boot Environment	1 MB
0x4050_0000	0x409F_FFFF	Reserved	2 MB
0x40A0_0000	0x43FF_FFFF	Kernel ITB	59 MB

12 Ethernet port map

The table below shows how the Ethernet port can be mapped to the U-Boot and the label on the board.

Table 8. Ethernet port mapping

Label on board	Port in U-Boot	Port in Linux
ETH1	pfe_eth0	eth0
ETH2	pfe_eth1	eth1

13 Enable Packet Forwarding Engine (PFE) Ethernet

To enable Packet Forwarding Engine (PFE) Ethernet on your FRDM-LS1012A:

1. Check the output of the `lsmod` command:

```
ls1012afrdm login: root
root@ls1012afrdm:~# lsmod
Module                  Size  Used by
```

2. If the output of `lsmod` doesn't show any PFE, perform `insmod`:

```
root@ls1012afrdm:~# find / -name pfe.ko
root@ls1012afrdm:~# insmod /lib/modules/4.1.8+g4b2f599/kernel/drivers/staging/fsl_ppfe/
pfe.ko
```

3. Run `ifconfig`:

```
root@ls1012afrdm:~# ifconfig eth0 <ip-address>
```

4. Ping to test Ethernet connection.

```
root@ls1012afrdm:~# ping 192.168.1.1
PING 192.168.1.1 (192.168.1.1) 56(84) bytes of data.
64 bytes from 192.168.1.1: icmp_seq=1 ttl=128 time=1.51 ms
64 bytes from 192.168.1.1: icmp_seq=2 ttl=128 time=1.06 ms
64 bytes from 192.168.1.1: icmp_seq=3 ttl=128 time=0.929 ms
64 bytes from 192.168.1.1: icmp_seq=4 ttl=128 time=1.01 ms
64 bytes from 192.168.1.1: icmp_seq=5 ttl=128 time=0.870 ms
64 bytes from 192.168.1.1: icmp_seq=6 ttl=128 time=0.865 ms
64 bytes from 192.168.1.1: icmp_seq=7 ttl=128 time=1.08 ms
64 bytes from 192.168.1.1: icmp_seq=8 ttl=128 time=1.10 ms
64 bytes from 192.168.1.1: icmp_seq=9 ttl=128 time=1.11 ms
64 bytes from 192.168.1.1: icmp_seq=10 ttl=128 time=0.867 ms
64 bytes from 192.168.1.1: icmp_seq=11 ttl=128 time=1.05 ms
64 bytes from 192.168.1.1: icmp_seq=12 ttl=128 time=1.02 ms
64 bytes from 192.168.1.1: icmp_seq=13 ttl=128 time=0.982 ms
64 bytes from 192.168.1.1: icmp_seq=14 ttl=128 time=1.06 ms
64 bytes from 192.168.1.1: icmp_seq=15 ttl=128 time=1.02 ms
--- 192.168.1.1 ping statistics ---
15 packets transmitted, 15 received, 0% packet loss, time 14007ms
rtt min/avg/max/mdev = 0.865/1.037/1.510/0.154 ms
```

14 Updating FRDM-LS1012A board images

For updating prebuilt images on the FRDM-LS1012A:

1. Download the latest prebuilt ISO image, `<LS1012A-SDK-AARCH64-IMAGE-YYYYMMDD-yocto>`, from the following location:

   http://www.nxp.com/products/microcontrollers-and-processors/arm-processors/qoriq-arm-processors/qoriq-ls1012a-freedom-board:FRDM-LS1012A?fpsp=1&tab=Design_Tools_Tab

2. Mount the ISO on the host machine, as per the instructions in Install the SDK in LS1012A SDK documentation.
3. Obtain the binaries (RCW binary file (`PBL_0x33_0x05_800_250_1000_default.bin`), U-Boot binary file (`u-boot.bin`) and kernel binary file (`kernel-ls1012afrdm.itb`)) from SDK and keep them at the tftp server to download the binaries to the FRDM-LS1012A.
4. Connect any of the SGMII PHY ETH ports (J6 or J7) to the tftp server.
5. Press reset switch, SW1, to reset the board. Press Enter to stop autoboot. The U-Boot prompt will appear.
6. Run following command to check for connection to server.

```
ping $serverip
```

7. If the server connection is working successfully, use following commands to overwrite the RCW, U-Boot, and kernel binary files in QSPI.

NOTE

In the RCW, U-Boot, and Kernel procedures below, run step "b", only if the step "a" is a success.

If RCW and U-Boot overwrites fail, the board will become unusable.

- RCW:
  1. `tftp 0x80000000 PBL_0x33_0x05_800_250_1000_default.bin;`
  2. `sf probe 0:0; sf erase 0 40000; sf write 0x80000000 0x0 40000;`

- U-Boot
  1. `tftp 0x80000000 u-boot.bin;`
  2. `sf probe 0:0; sf erase 0x100000 80000; sf write 0x80000000 0x100000 80000;`
- Kernel
  1. tftp `0x96000000 kernel-ls1012afrdm.itb;`
  2. `sf probe 0:0; sf erase $kernel_start $kernel_size; sf write 0x96000000 $kernel_start $kernel_size;`

NOTE

Please note that the commands to flash Kernel to the QSPI memory take some time to complete. There is no activity at console during this time.

15 Troubleshooting

This topics explains the basic troubleshooting steps for the FRDM-LS1012A:

1. Console not showing any prints.
   a. Disconnect the USB cable and any other cables, such as header for USB power, debugger TAP. Wait for some time and reconnect the USB cable. Install the MBED driver again from:

      https://developer.mbed.org/handbook/Windows-serial-configuration

   b. Check the D1 green LED. It should turn on.
   c. Press Reset switch (SW1). U-Boot logs will be available on the console.
   d. If console still does not show any print, the flash image is corrupt. Try to flash the RCW and U-Boot again.
2. Ethernet ports not working in U-Boot.
   a. Run `print` command on the console and reassign using setenv <variable name>
      1. `eth0addr` : MAC printed on ETH1 (J6) connector
      2. `eth1addr` : MAC printed on ETH2 (J7) connector (near the power connector)
      3. `ipaddr` : Assign a proper IP address in same domain as server
      4. `serverip` : Assign server's ip (may be PC running tftp server)
      5. `saveenv`
   b. Reboot the board.
   c. Run `mii info` to see if the PHYs are accessible. In log below, the Ethernet port ETH2 is showing autoneg at 100MBaseT.

      ```
      => mii info
      PHY 0x00: OUI = 0x0732, Model = 0x11, Rev = 0x06, 100baseT, FDX
      PHY 0x01: OUI = 0x0732, Model = 0x11, Rev = 0x06, 100baseT, FDX
      PHY 0x02: OUI = 0x0732, Model = 0x11, Rev = 0x06,  10baseT, HDX
      ```

   d. Ping a IP in network to verify if the Ethernet port is up or not.
3. Ethernet port not working in Linux after tftp boot.
   a. Before `bootm` command to boot the Kernel, use `pfe stop` to stop PFE in U-Boot.
4. USB host not working:
   a. Check the D2 LED indication. It should be ON when the USB device is accessed in host mode.
   b. If D2 is not lit, check the proper orientation of power cable connected to J12 connector (header for USB power). Refer Figure 5.
5. Audio output not heard:
   - Check that audio device is connected to OUT port (J8 connector near the USB 3.0 port).

16 Revision history

This sections summarizes revisions to this document.

Table 9. Revision history

Revision	Date	Section	Description
0	06/30/2016		Initial public release.
1	07/22/2016	Prerequisites	Added prerequisites section
		Booting FRDM-LS1012A	Renamed section from "Board startup" to "Booting FRDM-LS1012A" and added more details and figures to the board booting steps
		Enable Packet Forwarding Engine (PFE) Ethernet	Updated the steps for enabling PFE
		Updating FRDM-LS1012A board images	Added new section for how to update the FRDM-LS1012A images
		Troubleshooting	Added new section for basic troubleshooting steps for the FRDM-LS1012A
		Related documentation	Updated the section to include link to the SDK documentation
2	07/26/2016	Prerequisites	Added prerequisite to download and install TFTP server
		Booting FRDM-LS1012A	Added step to enter password to login to the board
		Enable Packet Forwarding Engine (PFE) Ethernet	Added output for the lsmod command, when PFE is not detected
		Updating FRDM-LS1012A board images	Added following note: "Please note that the commands to flash Kernel to the QSPI memory take some time to complete. There is no activity at console during this time."

How to Reach Us:

Home Page:
nxp.com

Web Support:
nxp.com/support

Document Number FRDM-LS1012AGSG
Revision 2, 07/2016