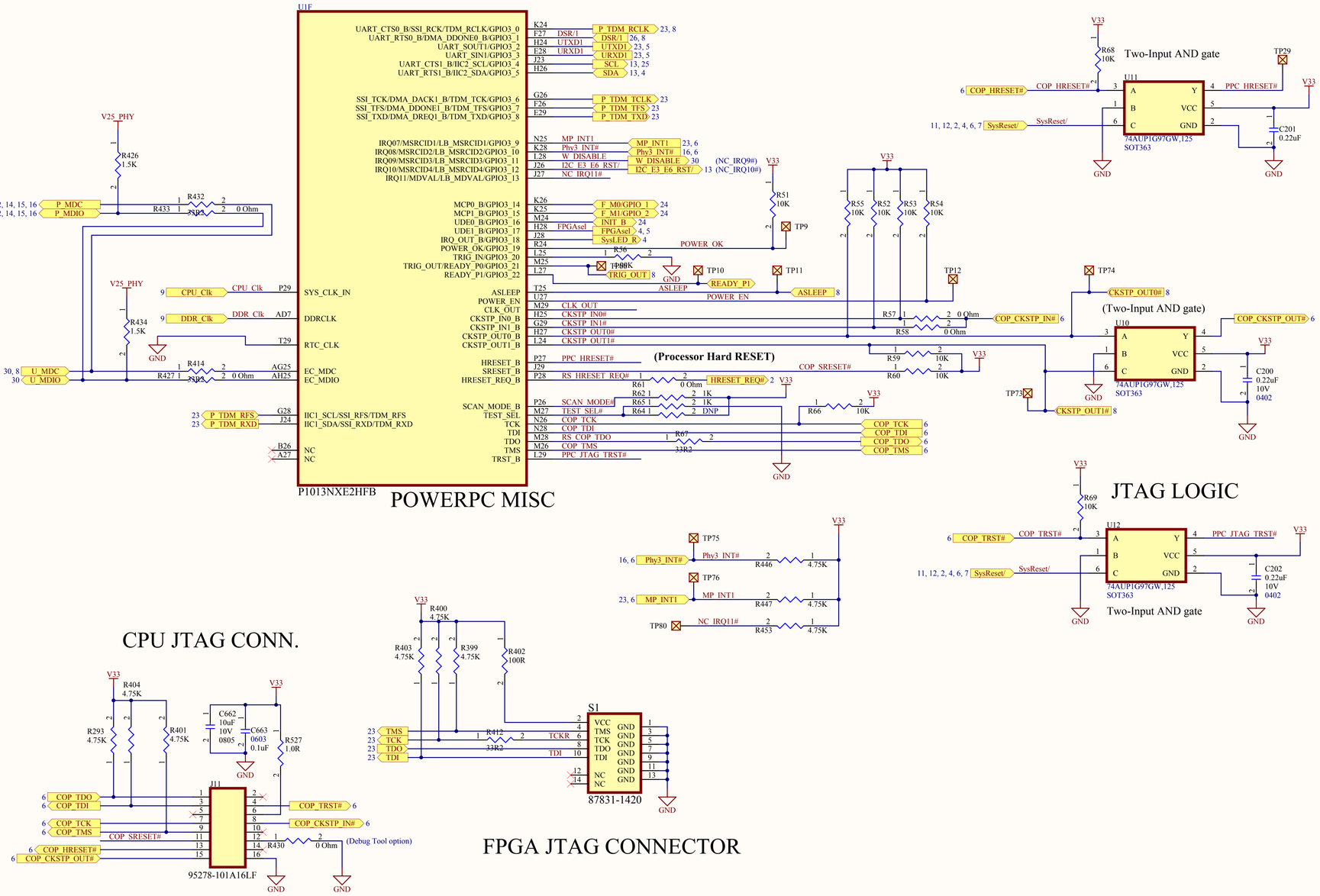

Size	FCSM No.	DWG No.	Rev
A2			A
Scale		Sheet 6 of 31	