Wireless Battery Management

Peter Pinewski

Automotive Field Applications Engineer

October 2019 | Session #AMF-AUT-T3827

SECURE CONNECTIONS FOR A SMARTER WORLD

Agenda

- Introduction
- Why BMS?
- Wired Systems
- BMS devices
- Wireless devices
- Wireless BMS system

NXP is Global #1 in Auto Semiconductors

With Secure End-toend Hardware and Software Solutions

Technology Leadership + Applications Focus = #1 in Auto Semiconductors

#1 Auto Analog / RF / DSP
#1 Auto Microcontrollers (ex. Japan)
#1 Merchant Auto MEMS Sensors

#1 Car Infotainment
#1 Secure Car Access
#1 Body & In-Vehicle Networking
#1 Safety
#1 Powertrain

Innovation Leader ADAS
Innovation Leader Security

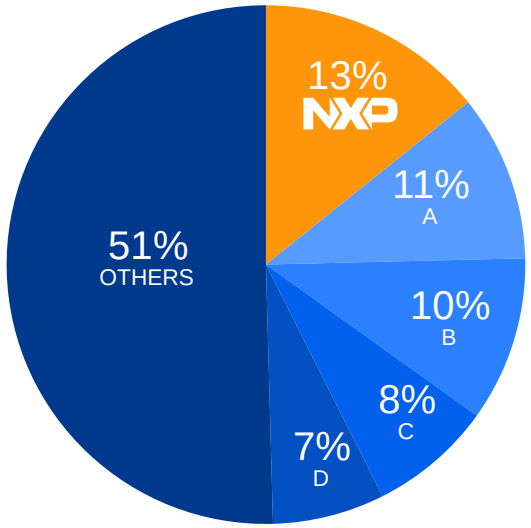

2017 Global Auto Semi Market: $34.5B

Automotive Global Megatrends

Driving the need for next generation silicon capabilities

Autonomy

Electrification

Connectivity

Safe and Secure Mobility / Zero Emissions

Automotive Battery Management Applications

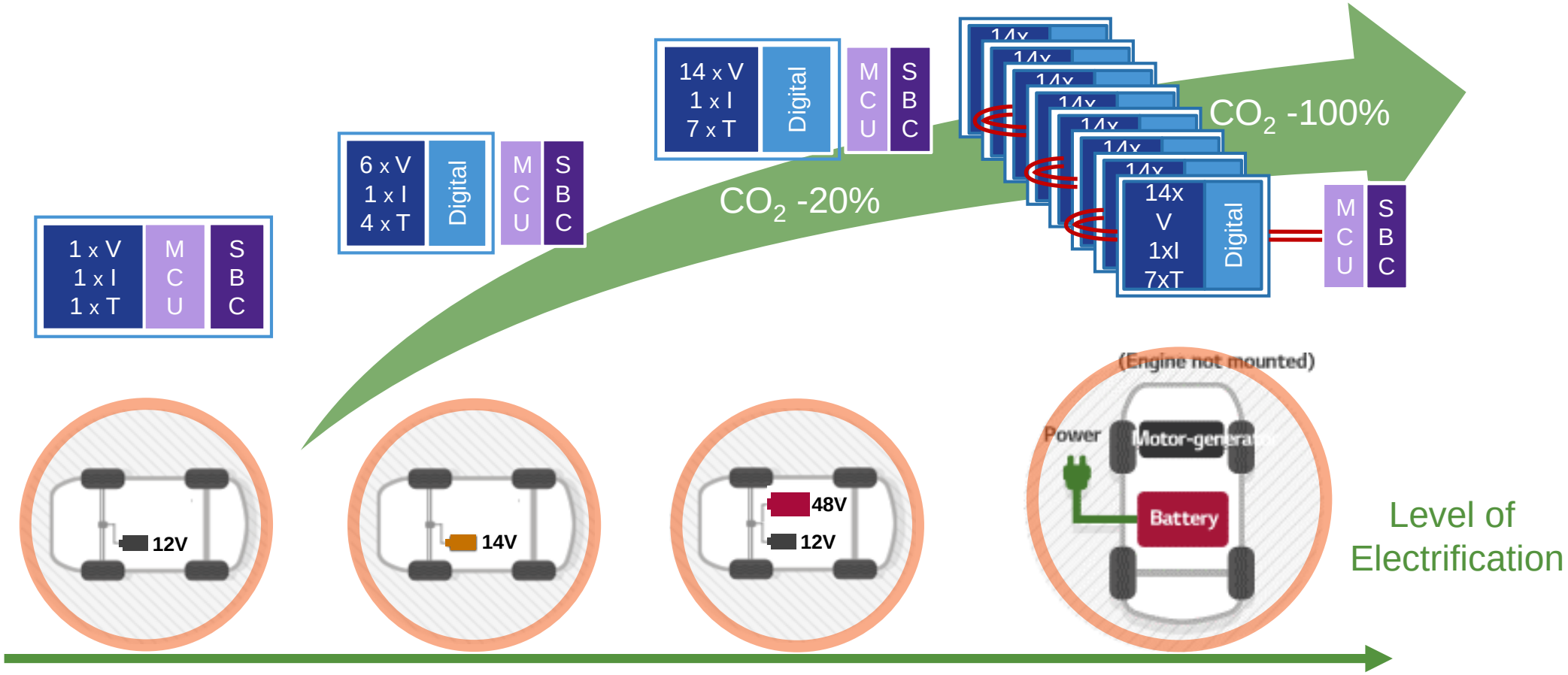

Start-Stop
12V Pb Battery

Advanced Start-Stop
14V Li-ion Battery

48V Mild Hybrid
48V Li-ion Battery

EV/PHEV
High Voltage Li-ion Battery

Vehicle Electrification Forecasts

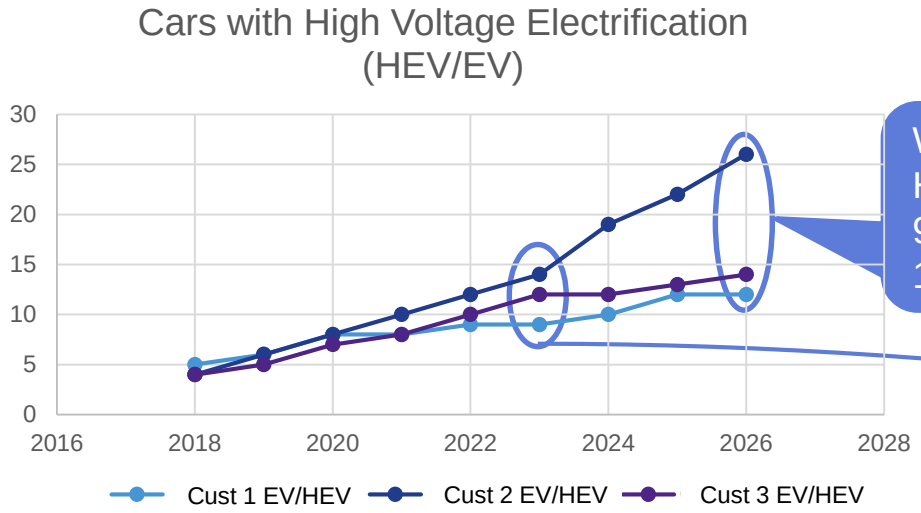

WW Full & Plug-in Hybrid /Full EV
9-16 Mu in 2023
14-26 Mu in 2026

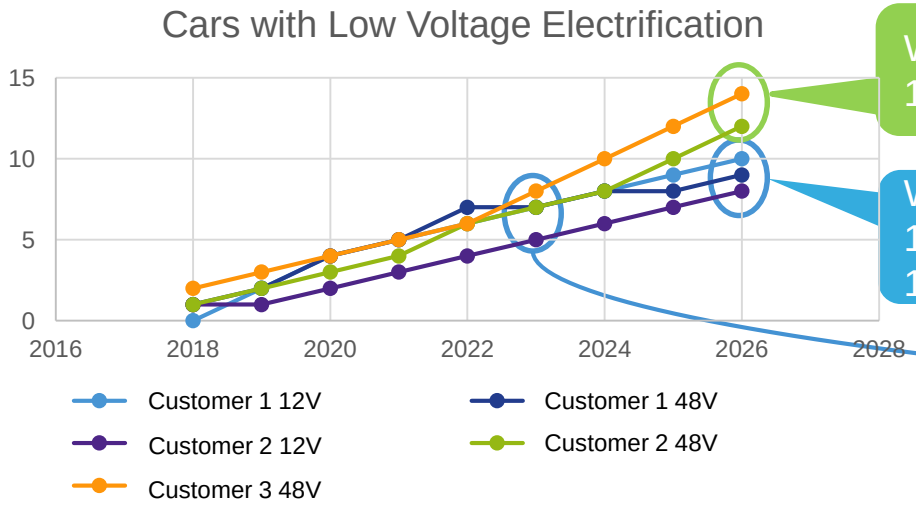

WW Hybrid 48V
12-14 Mu in 2026

WW Hybrid 12V+12V
10 Mu in 2026

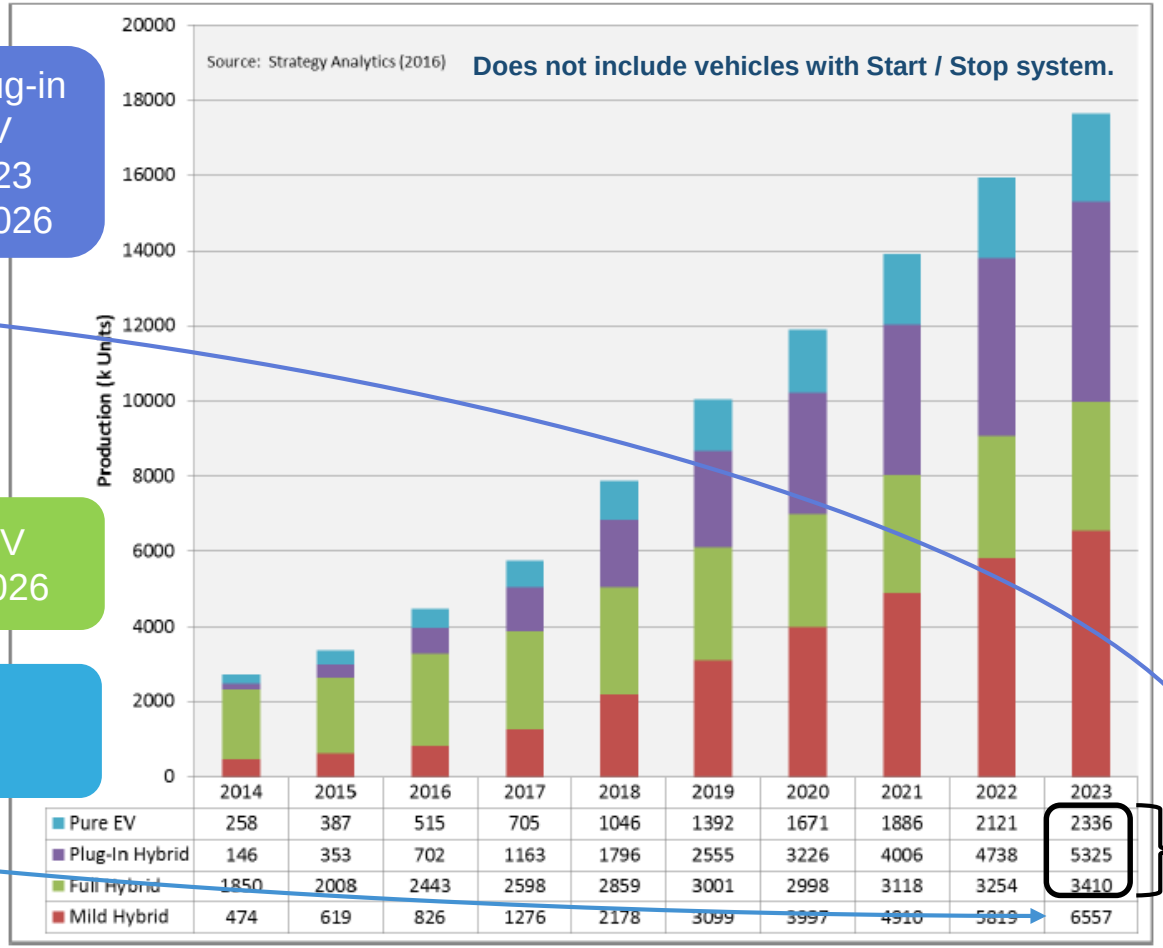

	2014	2015	2016	2017	2018	2019	2020	2021	2022	2023
Pure EV	258	387	515	705	1046	1392	1671	1886	2121	2336
Plug-In Hybrid	146	353	702	1163	1796	2555	3226	4006	4738	5325
Full Hybrid	1850	2008	2443	2598	2859	3001	2998	3118	3254	3410
Mild Hybrid	474	619	826	1276	2178	3099	3997	4910	5813	6557

11Mu

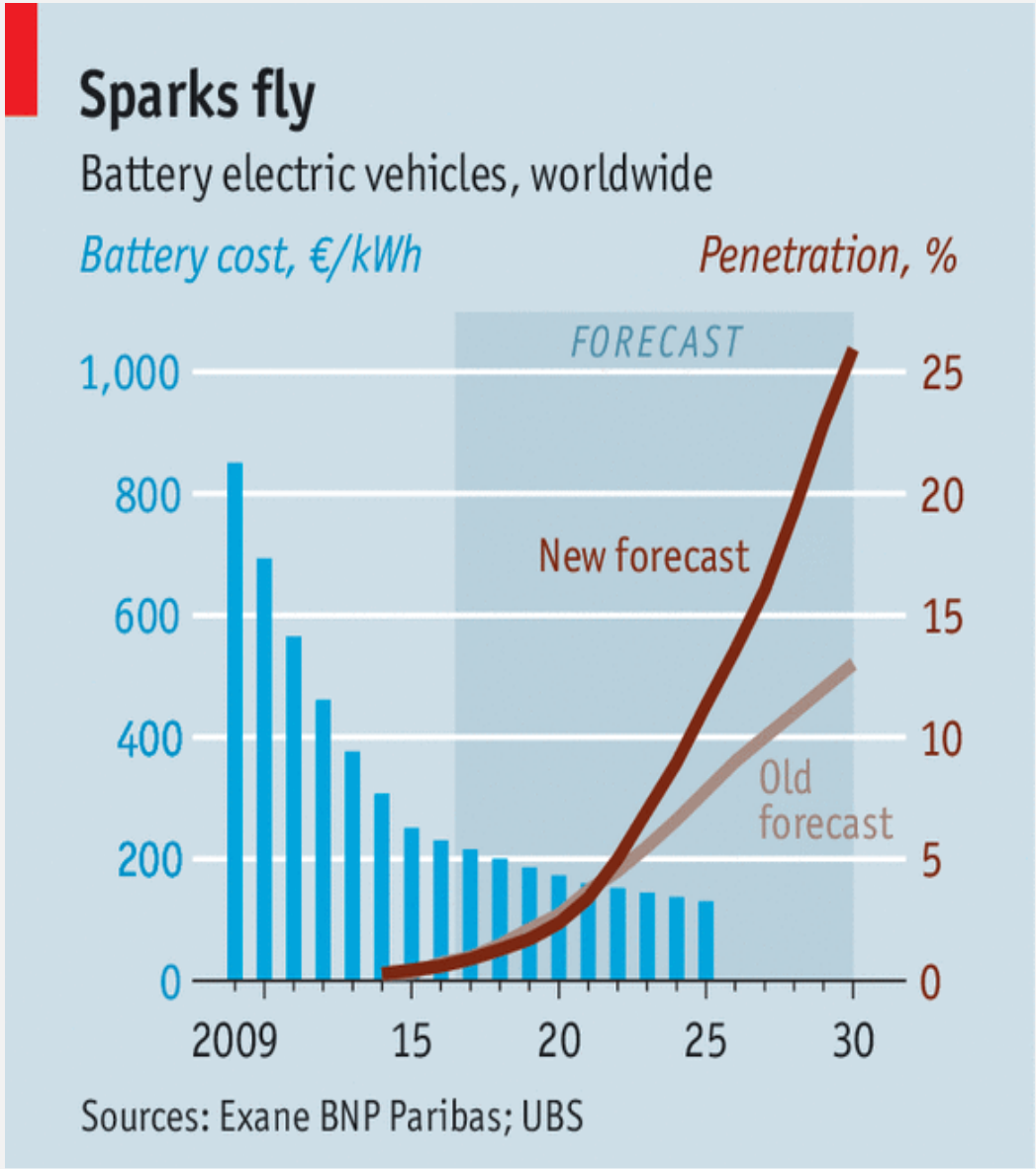

Economist.com
Feb 18th , 2017

Electrification Drivers

- Rising cost of complying with emissions regulations
- The falling cost of batteries

Lithium-Ion Batteries Performance

- **Common rechargeable batteries**
  - Lead-acid
  - NiCd
  - NiMH
  - **Li-ion**

- **Li-ion offers best general performance**

- **Rapidly growing volume of Li-ion:**
  - **Significant drop in cell cost**
    (10~14% per year till 2020) (JP Morgan & Morgan Stanley, June 2016)
  - **Significant improvement in product maturity**

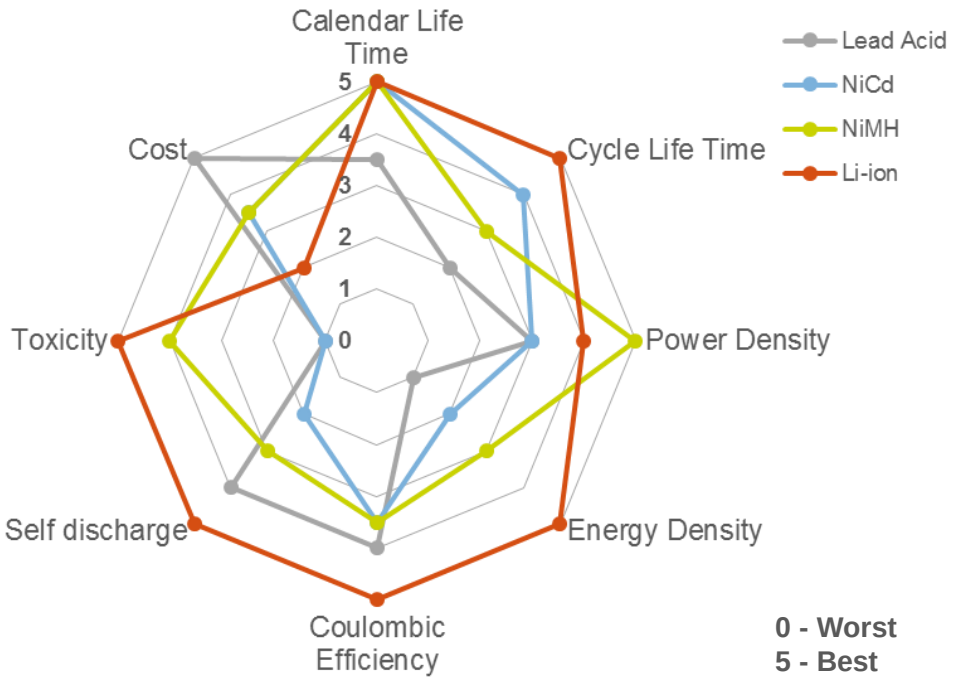

Building a Li-Ion Battery Pack

Lithium Cell
3.6 V

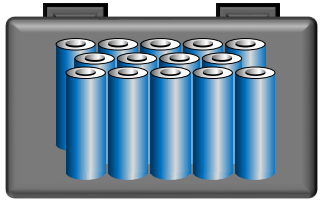

Example Battery Module
14 cells x 3.6V = **50.4 V**

Example Battery Pack
8 modules x 50.4 V = **403 V**

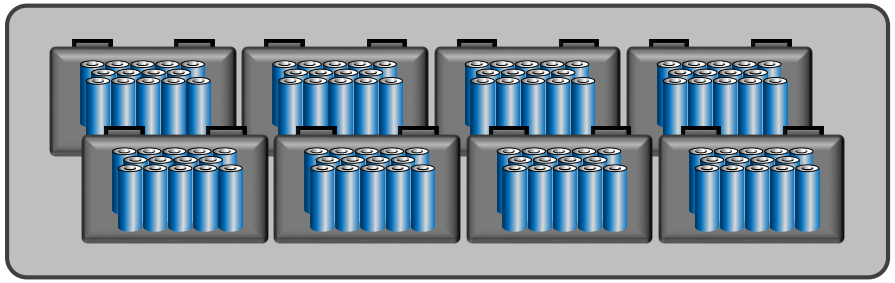

14 cells/module * 8 modules = **112 cells**

- Nominal Lithium Cell Voltage = 3.6-3.8V
- Number of Cells in a Module varies by manufacturer/application
- Battery pack voltages and configurations vary by manufacturer/application

Why Battery Management?

Design flaws led to 2013 lithium-ion battery fire in Boeing 787: U.S. NTSB

DEC 1, 2014 - https://www.reuters.com/article/us-boeing-787-battery/design-flaws-led-to-2013-lithium-ion-battery-fire-in-boeing-787-u-s-ntsb-idUSKCN0JF35G20141202

Samsung Galaxy Note 7 banned by more airlines over fire risk

16 October 2016 – https://www.bbc.com/news/business-37674170

Hoverboards recalled for fire and explosion risks — again

Nov 15, 2017 – https://usatoday.com/story/tech/talkingtech/2017/11/15/hoverboards-recalled-fire-and-explosion-risks-again/865643001/

Faulty MacBook Pro Batteries Face FAA No-Fly Rule

Aug 17, 2019 - https://www.forbes.com/sites/ewanspence/2019/08/17/apple-macbook-pro-fifteen-inch-battery-recall-safety-fire-faa-airline-flying-ban/#bd2fbfc2b46c

*Hazard to be mitigated is **thermal runaway**!*

Why Battery Management?

The purpose of BMS is to:

- Provide Battery Module / Battery Pack **SAFETY** and **LONGEVITY**. ***Required for Li-ion!***
- Provide **QUICK** and **RELIABLE** error monitoring and control. *(i.e. Over Temp, Under Temp, Over Volt, Under Volt, Over Current etc)*
- Estimate State-of-Charge **(SoC)**
- Estimate State-of-Health **(SoH)**
- Determine **CAPACITY** through precise **SoC** and **SoH** estimation.
- Compensate for cell differences (Cell balancing)
- Indicate end-of-life when the capacity falls below a target threshold.

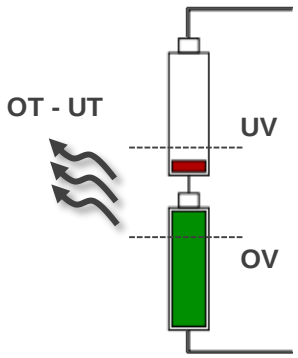

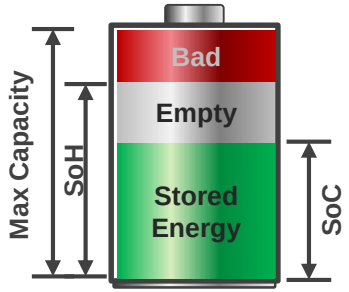

Key BMS Functions

Guarantee Safety

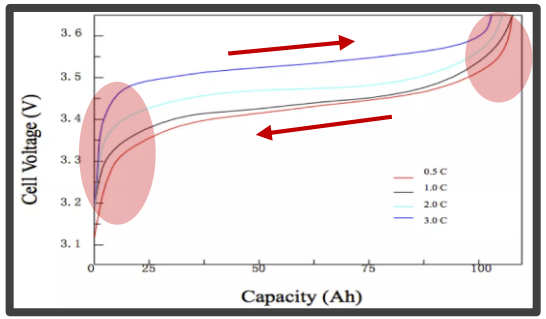

Danger:

- Over voltage
- Extra heat
- Unstable chemical stage
- Thermal runaway ->fire/explosion
- Low temperature charge

- **V - I - T measurement**
- **OV / UV / OT / UT detection**

Guarantee Performance

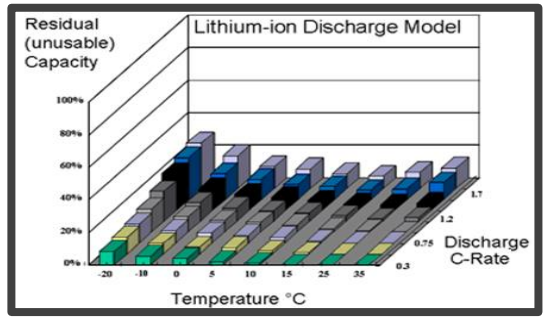

Requirements:

- Safe & fast charging
- Discharge optimization
- State of charge (SOC) estimation
- State of health (SOH) estimation

- **V - I - T measurement**
- **Coulomb Counting**
- **Synchronization**
- **Internal Resistance Calculation**

Guarantee Multi-cell Function

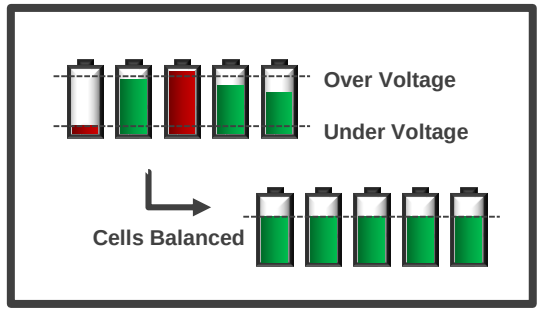

Challenges:

- Up to hundreds of cells
- Manufacture mismatch
- Capacity degradation
- Lifetime degradation

- **Cell balancing**

Typical BMS Applications for Automotive

14V, 48V, High Voltage

Typical 12-14V Li-Ion BMS Application

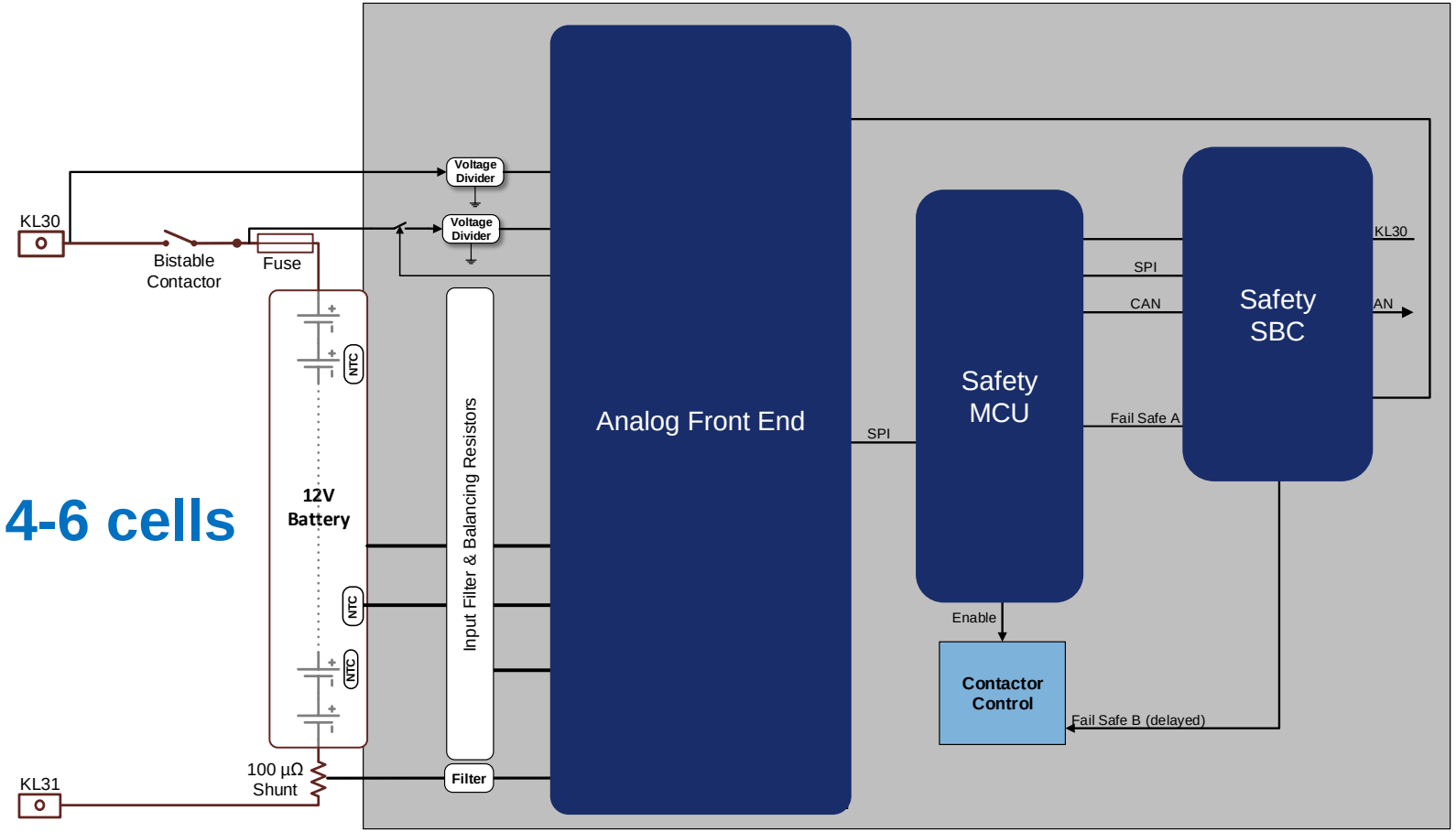

Typical 48V Li-Ion BMS Application

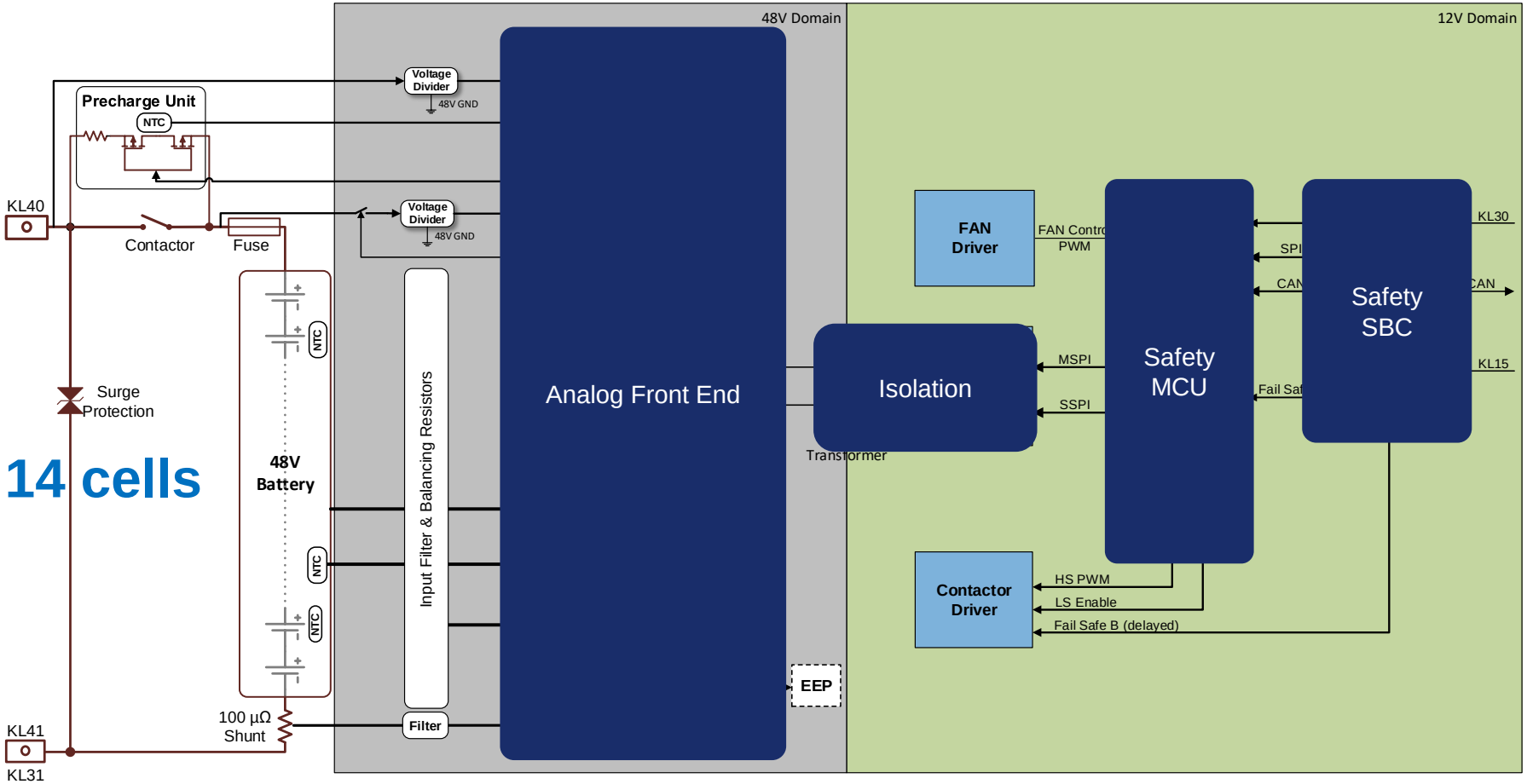

Typical Distributed High Voltage BMS Application

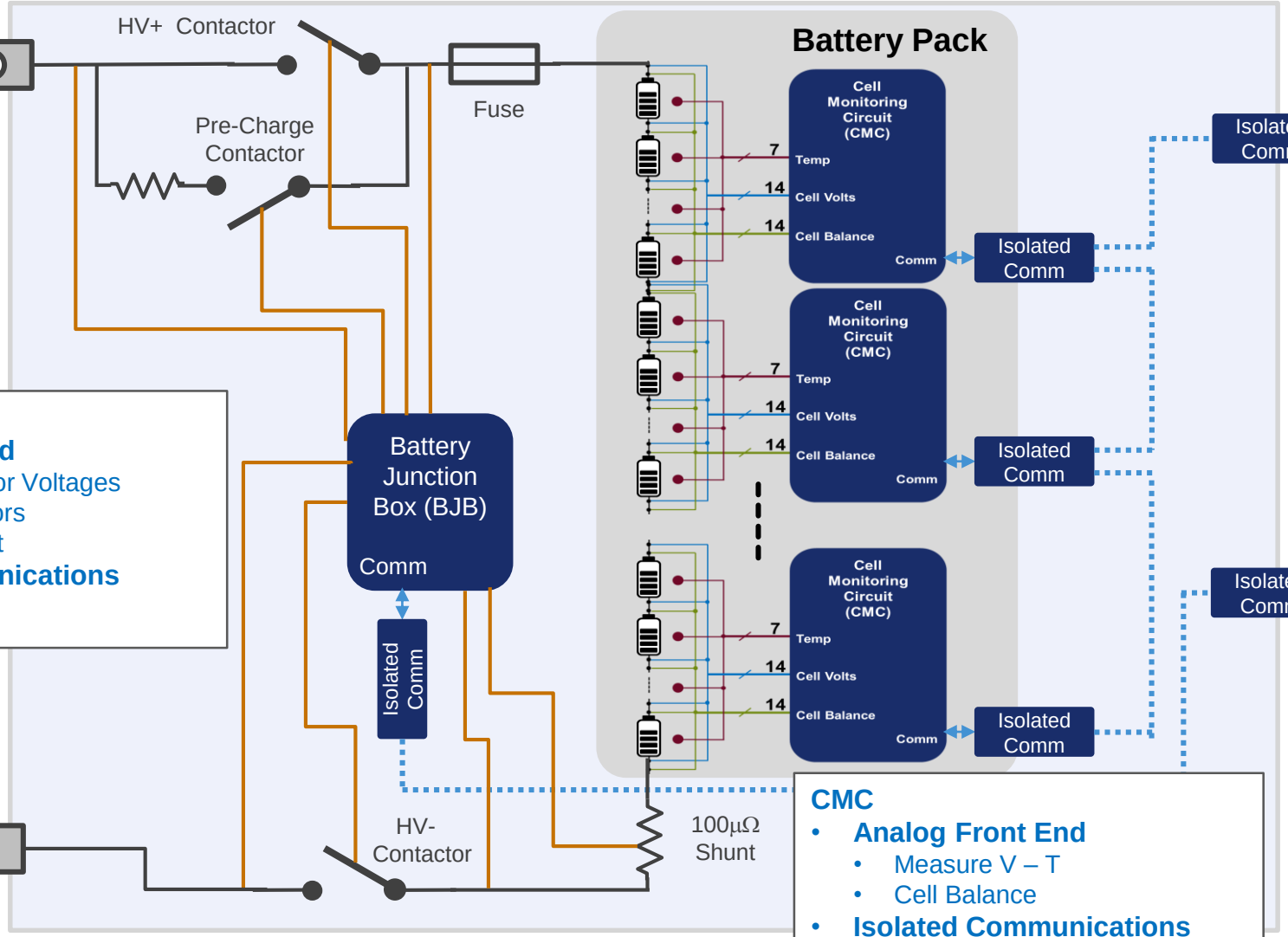

BJB:
- **Analog Front End**
  - Monitor Contactor Voltages
  - Control Contactors
  - Measure Current
- **Isolated Communications**

CMC
- **Analog Front End**
  - Measure V – T
  - Cell Balance
- **Isolated Communications**

BMC
- **Safety MCU - ASIL-D**
  - Control System / Safety
- **Safety SBC - ASIL-D**
- **Isolated Communications**

NXP Analog Front End Solutions

MC33771, MC33772, MC33664

NXP's Scalable Battery Management Portfolio

- Addresses all BMS Applications
- Maximizes HW/SW reuse

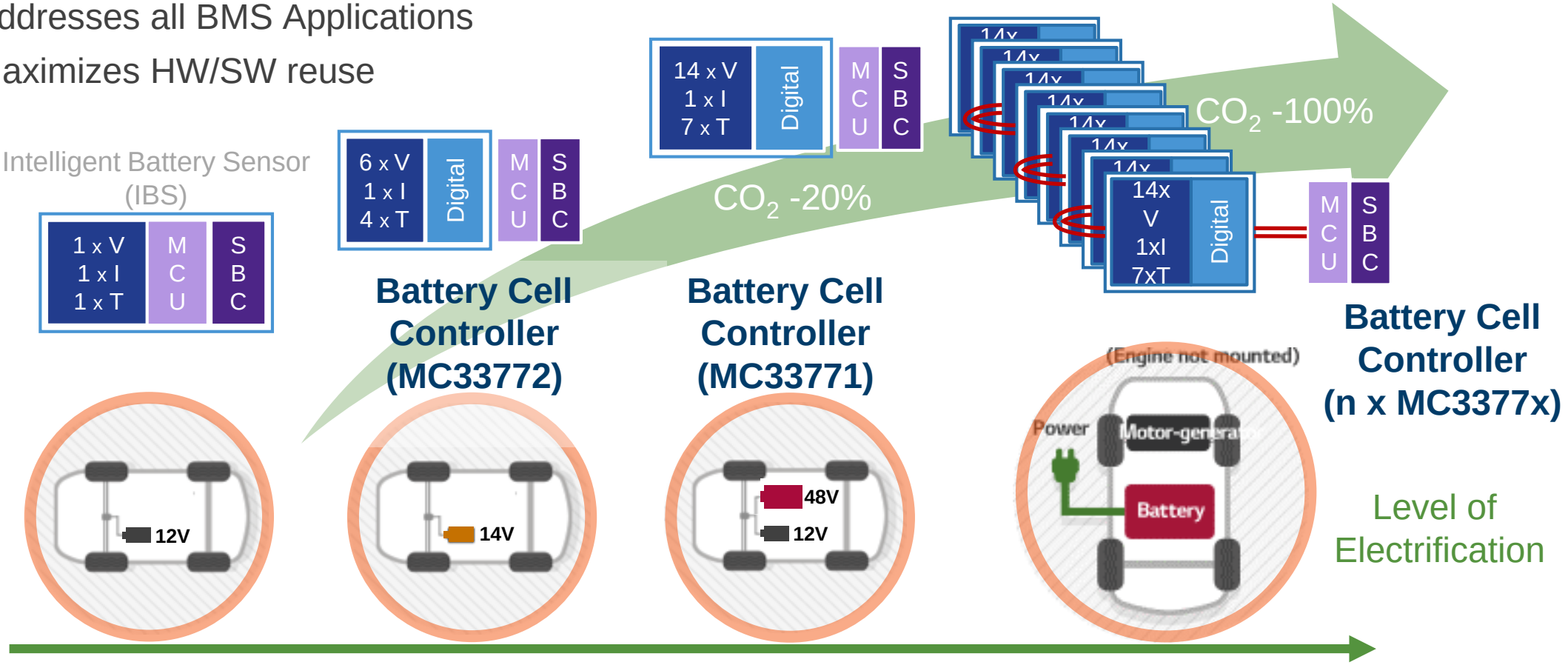

NXP MC33771/2 Battery Cell Controller Solution

Battery Topology Flexibility

- Scalable SW & HW compatible BMS solution supporting **4 to 210 cells**
- **MC33771** (7 to 14 cells) & **MC33772** (3 to 6 cells) **fully compatible**
- Supporting Centralized, Distributed Daisy Chain, Distributed CAN

High integration level

- Integrated current Sensor (+-1200A)
- Integrated **Coulomb counter**
- Integrated **Balancing FETs** (300mA)
- Integrated Power Supply

High measurement accuracy

- ± 2~3 mV cell terminal (CT) voltage accuracy => accurate capacity prediction
- ± 0.5% accuracy integrated current sensor

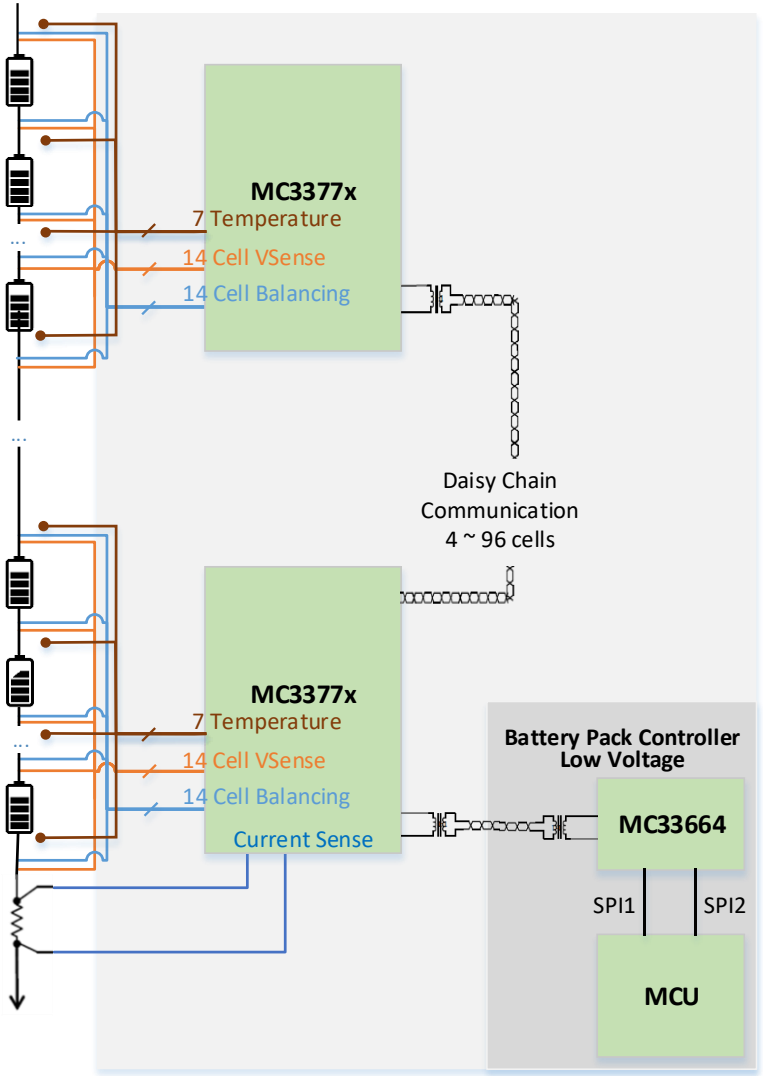

Fast data acquisition and communication

- 3.6 ~ 4.1ms for sending command and read back **96** cell

Superior daisy chain communication

- Low BOM with simple transformer only

System diagnostics and functional safety supporting ISO26262 w/ single chip

- Single chip **ASIL C** capable (**Easy ASIL D**)

Automotive robustness

- ESD, EMC; Hot Plug, AEC-Q 100

MC33771 – 14 Cell Battery Cell Controller AFE

Features:

- Operating Voltage:
  - 9.6V ≤ VPWR ≤ 61.6V Operation, 70V Transient
- SPI or Isolated 2 MHz Differential Communication
- 14 Cell Voltage Measurement Channels
- Total Stack Voltage Measurement
- Current sensor with ±0.5% accuracy from milliamps to kiloamps
- Coulomb Counter (also in low-power mode)
- 7 ADC/GPIO/Temperature Sensor Inputs
- Addressable on Initialization
- 5.0V @ 5mA Reference Supply Output
- Integrated Sleep Mode Over/Under Voltage & Temperature Monitoring
- Over/Under Voltage, Over/Under Temperature Fault Verification
- Onboard Passive Cell Balancing with Diagnostics and balancing timers
- Open Cell Terminal Detection
- Internal Diagnostics
- Hot Plug Capable
- Operational Low Power Mode
- 64-LEAD LQFP-EP
- Temp range: -40°C to 105°C
- AEC-Q100 Automotive Qualified
- EMC/ESD Robustness

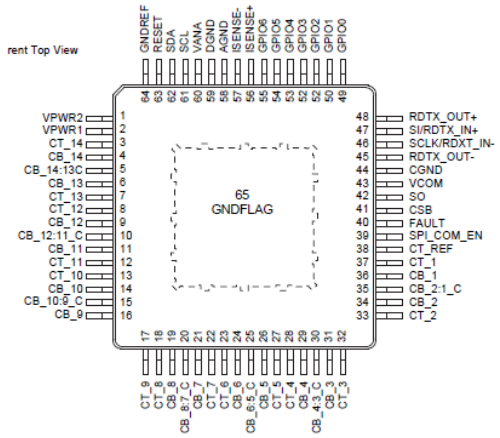

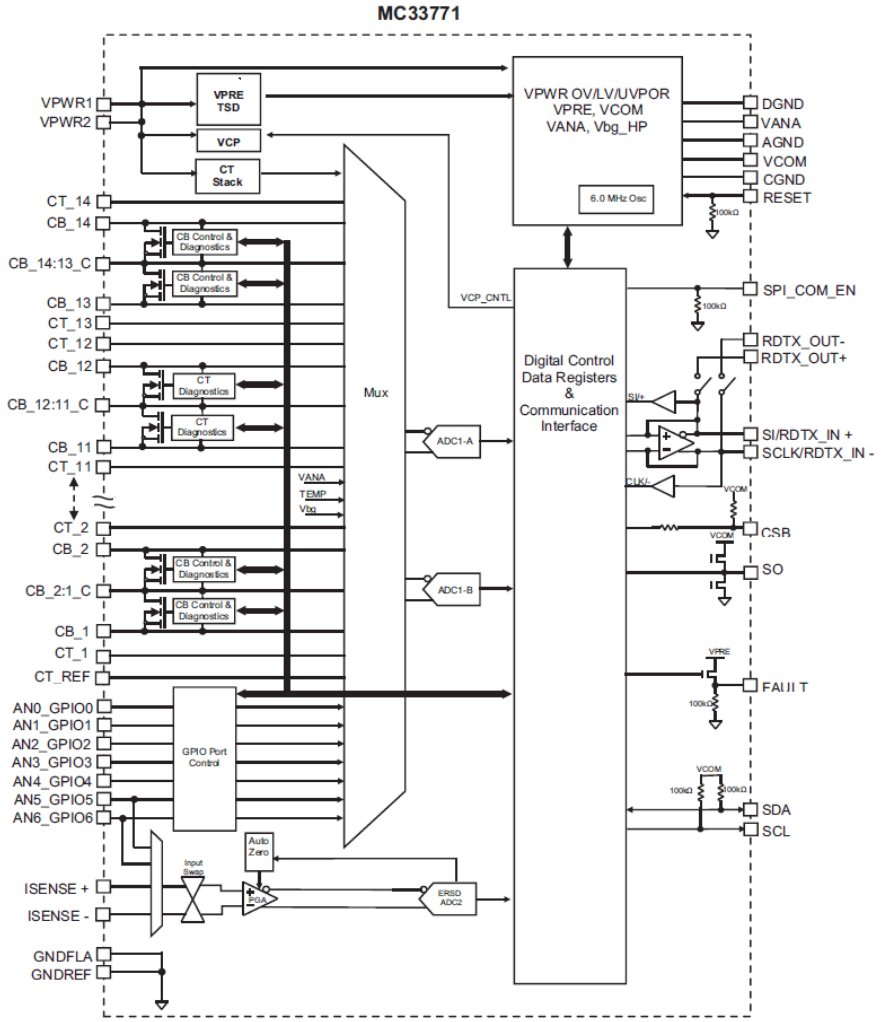

MC33772 – 6 Cell Battery Cell Controller AFE

Features:

- Operating Voltage:
  - 5V ≤ VPWR ≤ 30V Operation, 42V Transient (for SPI communication)
  - 7V ≤ VPWR ≤ 30V Operation, 42V Transient (for TPL communication)
- SPI or Isolated 2 MHz Differential Communication
- 6 Cell Voltage Measurement Channels
- Total Stack Voltage Measurement
- Current sensor with ±0.5% accuracy from mA to kA
- Coulomb Counter (also in Low-power mode)
- 7 ADC/GPIO/Temperature Sensor Inputs
- Addressable on Initialization
- 5.0V @ 5mA Reference Supply Output
- Integrated Sleep Mode Over/Under Voltage & Temperature Monitoring
- Over/Under Voltage, Over/Under Temperature Fault Verification
- Onboard Passive Cell Balancing with Diagnostics and balancing timers
- Open Cell Terminal Detection
- Internal Diagnostics
- Hot Plug Capable
- Operational Low Power Mode
- 48-LEAD LQFP-EP
- Temp range:
  -40°C to 125°C (for SPI communication)
  -40°C to 105°C (for TPL communication)
- AEC-Q100 Automotive Qualified
- EMC/ESD Robustness

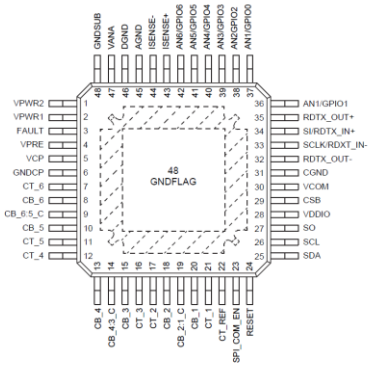

Figure 4. 33772 Pinout Diagram

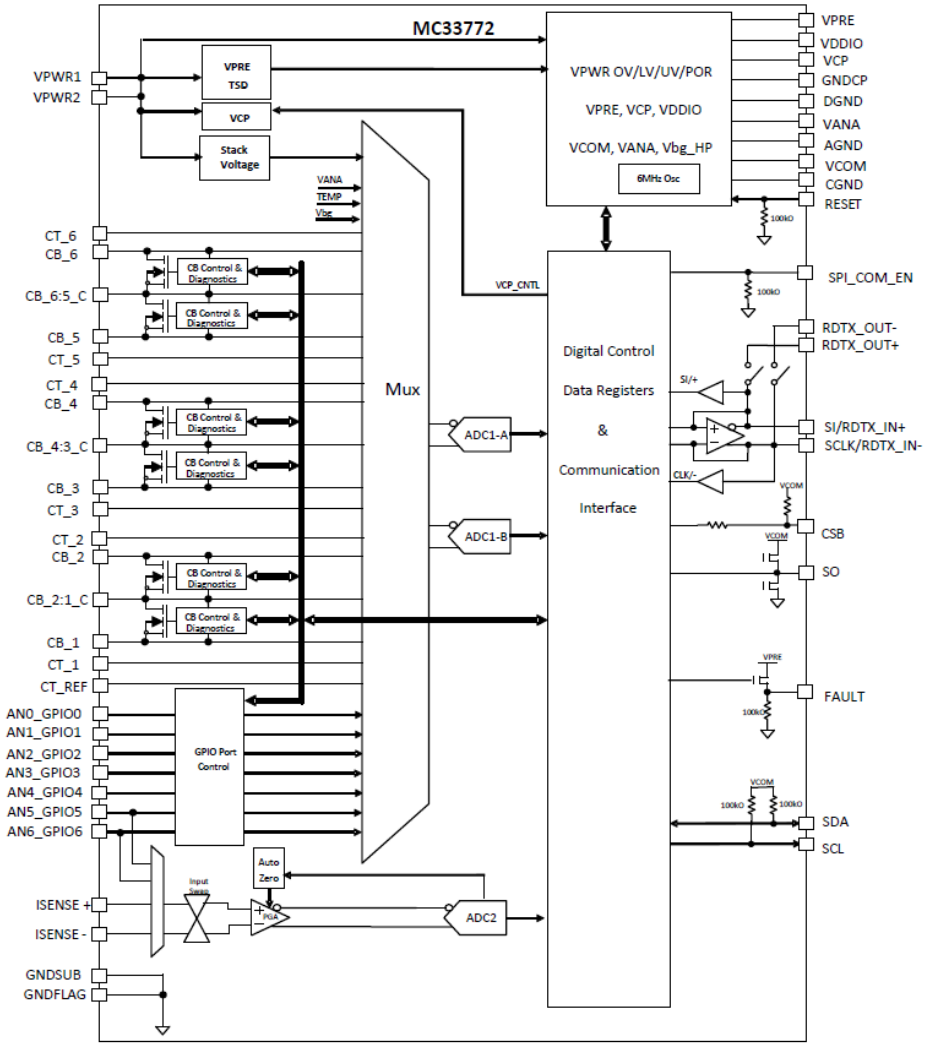

MC33772xTC – Isolated Current Measurement IC

Features:

- Operating Voltage:
  - 5V ≤ VPWR ≤ 30V Operation, 42V Transient (for SPI communication)
  - 7V ≤ VPWR ≤ 30V Operation, 42V Transient (for TPL communication)
- SPI or Isolated 2 MHz Differential Communication
- ~~6 Cell Voltage Measurement Channels~~
- Total Stack Voltage Measurement
- Current sensor with ±0.5% accuracy from mA to kA
- Coulomb Counter (also in Low-power mode)
- ADC/GPIO/Temperature Sensor Inputs
- Addressable on Initialization
- 5.0V @ 5mA Reference Supply Output
- Integrated Sleep Mode ~~Over/Under Voltage & Temperature Monitoring~~
- ~~Over/Under Voltage, Over/Under Temperature Fault Verification~~
- ~~Onboard Passive Cell Balancing with Diagnostics and balancing timers~~
- ~~Open Cell Terminal Detection~~
- Internal Diagnostics
- Hot Plug Capable
- Operational Low Power Mode
- 48-LEAD LQFP-EP
- Temp range:
  -40°C to 125°C (for SPI communication)
  -40°C to 105°C (for TPL communication)
- AEC-Q100 Automotive Qualified
- EMC/ESD Robustness

No Cell Sensing
No Cell Balancing

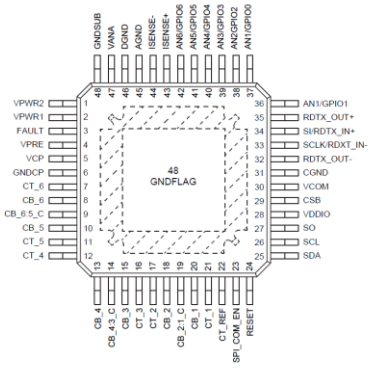

Figure 4. 33772 Pinout Diagram

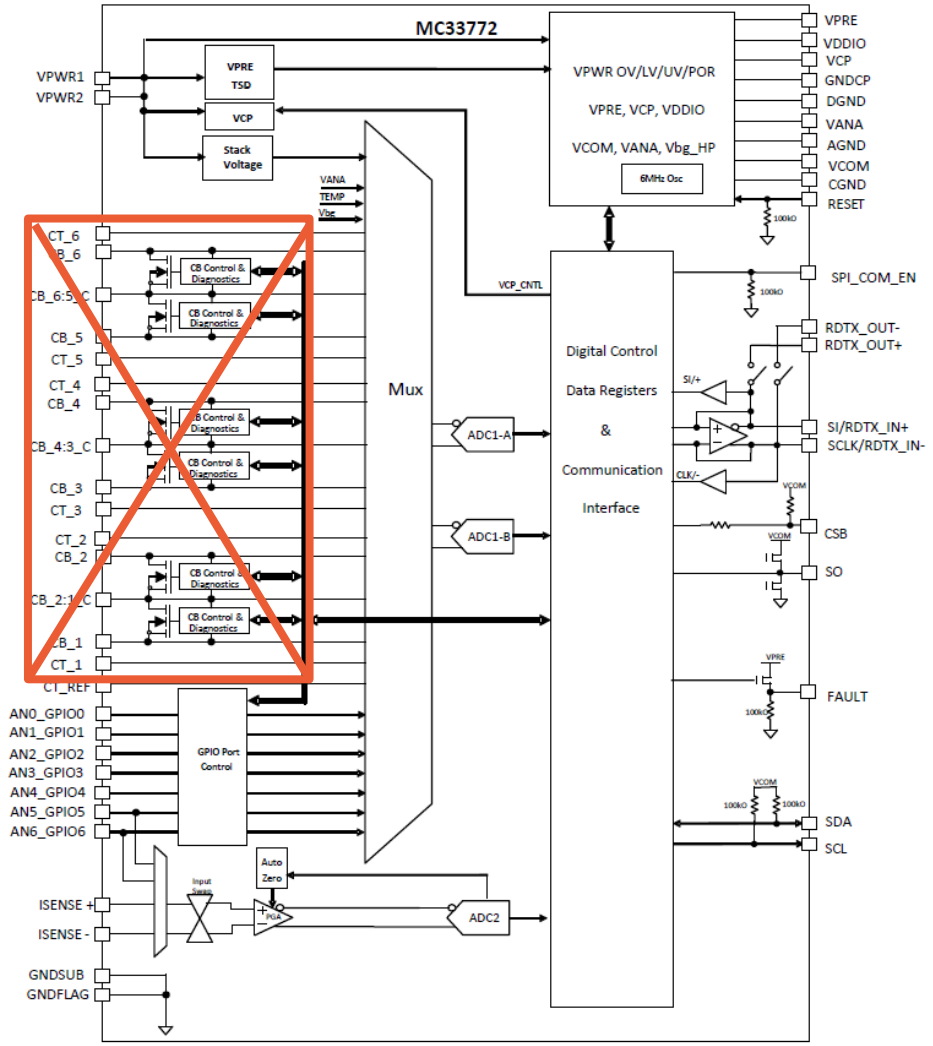

MC33664ATL Transformer Physical Layer

Features:

- 2Mpbs Isolated Network Communication Rate
- Dual SPI Architecture for Message Confirmation
- Robust Conducted and Radiated Immunity with Wake-up
- 3.3V and 5.0V Compatible Logic Thresholds
- Engineered for 5 Meter, 15 Node System
- Low Current Sleep Mode with Automatic Wake-up
- Sine Wave Transmission for low Radiated Emission

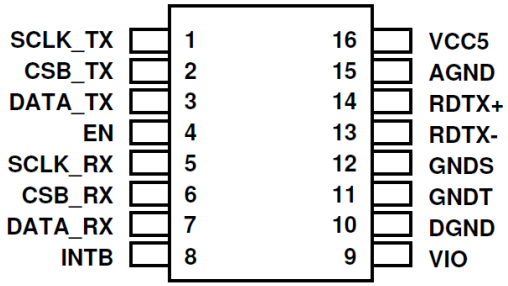

Figure 3. PC33664TL 16-Pin SOIC Narrow Body Pin Diagram

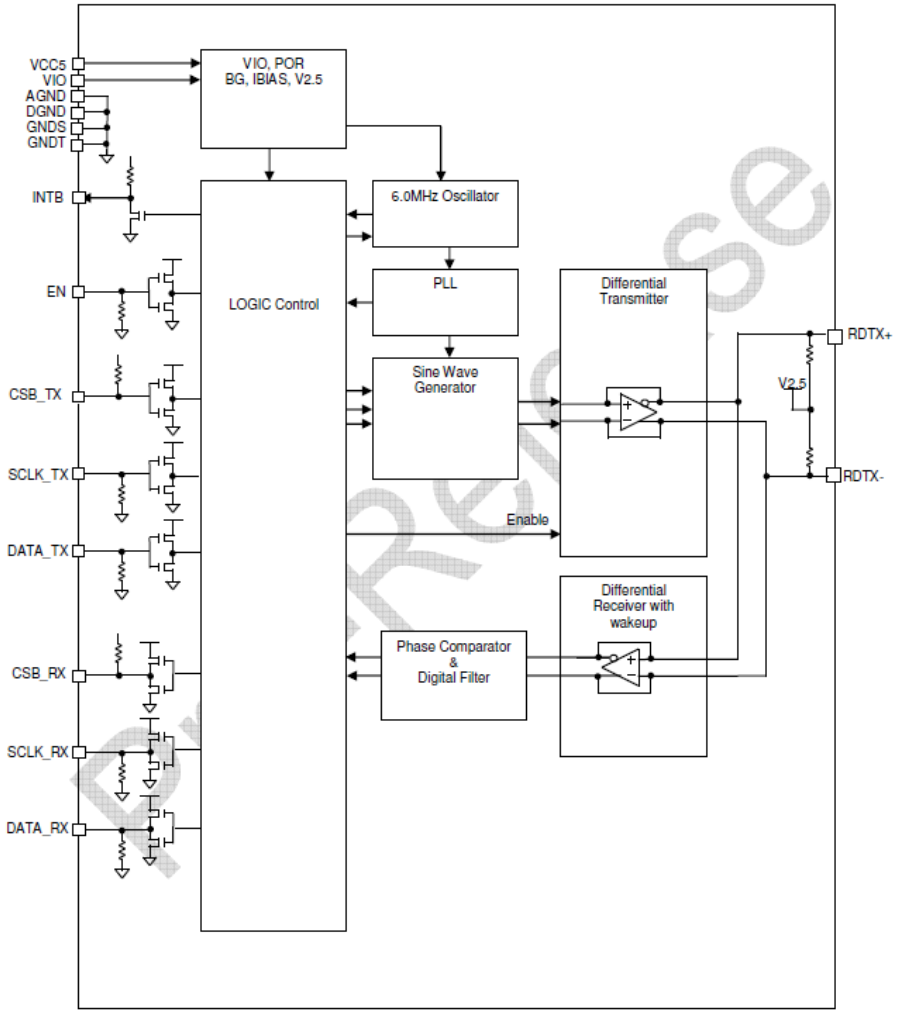

Figure 2. Internal Block Diagram

Battery Management Portfolio

Premium

MC3377xB**SP** (**SPI** comm)
MC3377xBT**P** (**TPL** comm)

- **Precise differential cell voltage measurement**
- **Cell OV/UV**
- **Synchronized current measurement**
- **Coulomb Count**
- **Cell balancing**
- **Temp measurement, O/U temperature**
- **Functional verification & diagnostics**
- **Communication:**
  - **2 MHz half duplex differential**
  - **SPI 4 MHz**

Package: 64/48-ld LQFP EP
Temp range: -40 C to +105C

Advanced

MC3377xB**SA** (**SPI** comm)
MC3377xB**TA** (**TPL** comm)

- **Precise differential cell voltage measurement**
- **Cell OV/UV**
- ~~Synchronized current measurement~~
- ~~Coulomb Count~~
- **Cell balancing**
- **Temp measurement, O/U temperature**
- **Functional verification & diagnostics**
- **Communication:**
  - **2 MHz half duplex differential**
  - **SPI 4 MHz**

Package: 64/48-ld LQFP EP
Temp range: -40 C to +105C

Basic

MC3377xBT**B** (**TPL** comm)

- **Precise differential cell voltage measurement**
- **Cell OV/UV**
- ~~Synchronized current measurement~~
- ~~Coulomb Count~~
- ~~Cell balancing~~
- **Temp measurement, O/U temperature**
- **Functional verification & diagnostics**
- **Communication:**
  - **2 MHz half duplex differential**
  - **SPI 4 MHz**

Package: 64/48-ld LQFP EP
Temp range: -40 C to +105C

Current

MC33772BT**C** (**TPL** comm)

- ~~Precise differential cell voltage measurement~~
- ~~Cell OV/UV~~
- **Synchronized current measurement**
- **Coulomb Count**
- ~~Cell balancing~~
- **Temp measurement, O/U temperature**
- **Functional verification & diagnostics**
- **Communication:**
  - **2 MHz half duplex differential**
  - **SPI 4 MHz**

Package: 64/48-ld LQFP EP
Temp range: -40 C to +105C

Half Duplex Differential PHY

MC33664ATL1

- **Differential transformer driver / receiver**
- **Bus and MCU wake-up**
- **SAFE output (Fail-Safe implementation)**
- **Operating voltage down to 3.5 V (cranking)**
- **On-board oscillator**
- **Analog bit filter**

Package: 16-ld LQFP EP
Temp range: -40 C to +105C

Typical Battery Cell Controller / TPL Implementation

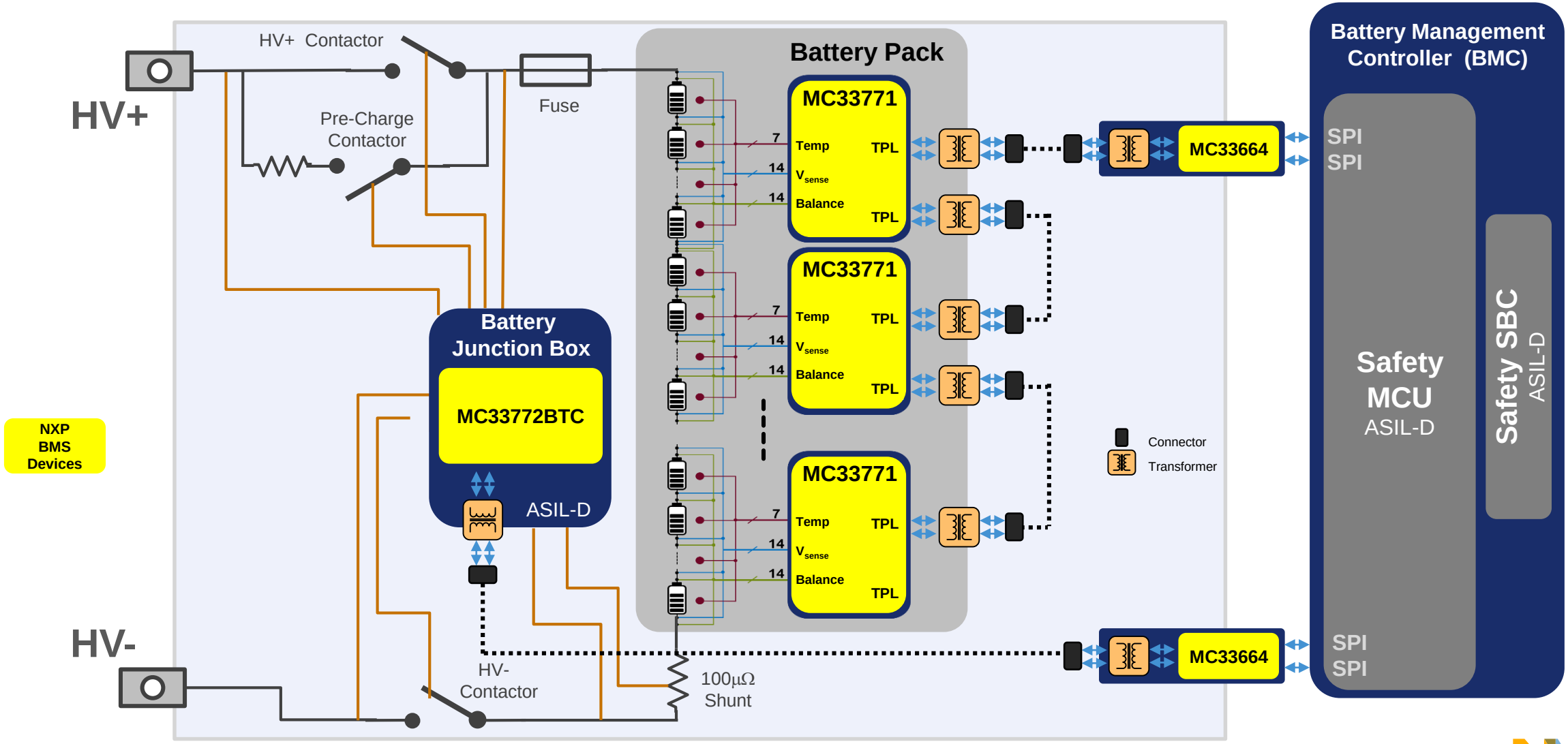

MC33771 Rev C

MC33771**C** – Device Level Changes

- **MC33771C** is a **derivative** of **MC33771B**, with **improved TPL2 block**.
- **MC33771C** has the same functionality as **MC33771B** with **pinout/package compatibility**.
- Only TPL & digital blocks are changed compared to **MC33771B**, other blocks are **FULLY compatible with MC33771B**.
- **Minimize** customer **software change** for **MC33771C** compared to **MC33771B.**

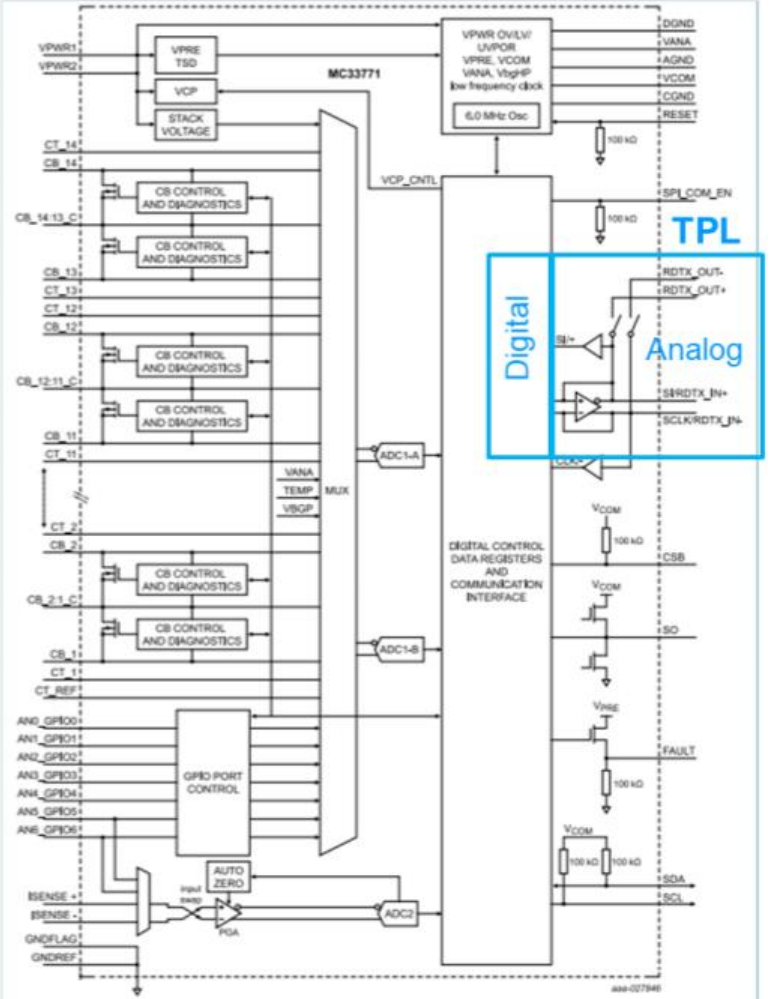

Figure 3. Simplified internal block diagram

Updated blocks on **MC33771C** compared to **MC33771B.**
Other blocks are identical between **MC33771B** and **MC33771C**.

MC33771**C** – Improved Daisy Chain

MC33771C TPL2 Improvements:

- Repeater structure in each TPL2 node
- Up to **63 nodes** in a single daisy chain
- **Inductive & capacitive** coupling support
- **Loopback** support
- Up to **20m** distance between nodes
- Compatible with MC33664

MC33771B

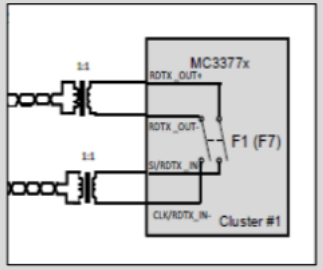

- TPL PHY is a bus which is controlled by internal switches
- Each wire segment, bus switch, and transformer contribute to signal attenuation and limit the number of nodes
- TPL is compatible with the MC33664

MC33771C

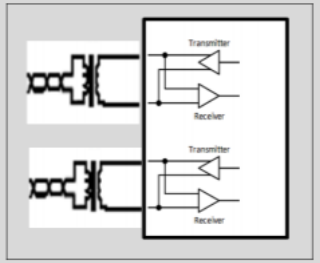

- TPL2 PHY bus is a series of lower power communication links
- Each node has a bidirectional repeater with transceivers for up and down communication
- TPL2 is compatible with the MC33664

MC3377xB/C – Comparison

Parameter	MC33771B	MC33771C
Voltage Channels	14	14
Supply Vpwr Range (Max Transient)	9.6V..61.6V (75V)	9.6V..61.6V (75V)
Cell Terminal Input Voltage Range	-0.3V to 5V	-0.3V to 5V
Typical Measurement Errror	± 0.8 mV	± 0.8 mV
Max Total Measurement Error (TME) for Cell Terminal Voltage	± 3.9 mV	± 3.9 mV
(After aging: MLS3 & 1000h HTOL)	Vpwr=9.6~61.6V, Vcell=1.5~4.3V -40~60°C	Vpwr=9.6~61.6V, Vcell=1.5~4.3V -40~60°C
Functional Safety	Single-chip ASIL C ASIL D Compliance	Single-chip ASIL C ASIL D Compliance
Isolated communication Speed	2 Mbps	2 Mbps
Communication Isolation	Inductive, Capacitive	Inductive, Capacitive
Max Nodes per Daisy Chain	15	63
CRC Bit	8	8
Comms bit	40	48
Integrated Balancing	<300 mA	<300 mA
Balancing sleep mode	Yes	Yes
Deep sleep mode	No	No
GPIO / Analog measurement inputs	7	7
Current Channels	1	1
Coulomb counter	1	1
Package	64-pin LQFP-EP	64-pin LQFP-EP

Application Option: Loopback

- On system level, several looped daisy chains can be supported by writing a daisy chain address in the node. Thus, the node can always decode the chain address from the command and know if the message was intended for it.
- To support loopback, two TPL drivers (master nodes) are connected physically at different SPI ports of MCU at different ends of daisy chain.
- The MCU through these Master nodes can reach a node from both direction. Also, in case of broken link a node can always be addressable from the other side.

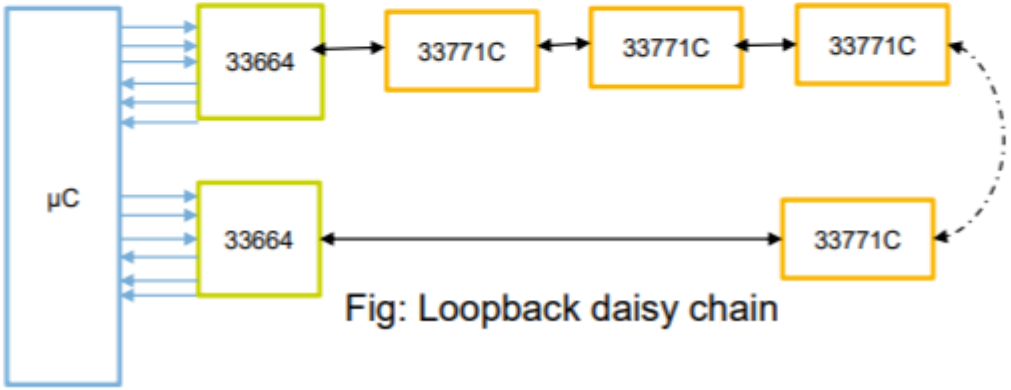

Fig: Loopback daisy chain

Wireless BMS

GFSK, BLE, Other?

Typical Battery Cell Controller / TPL implementation

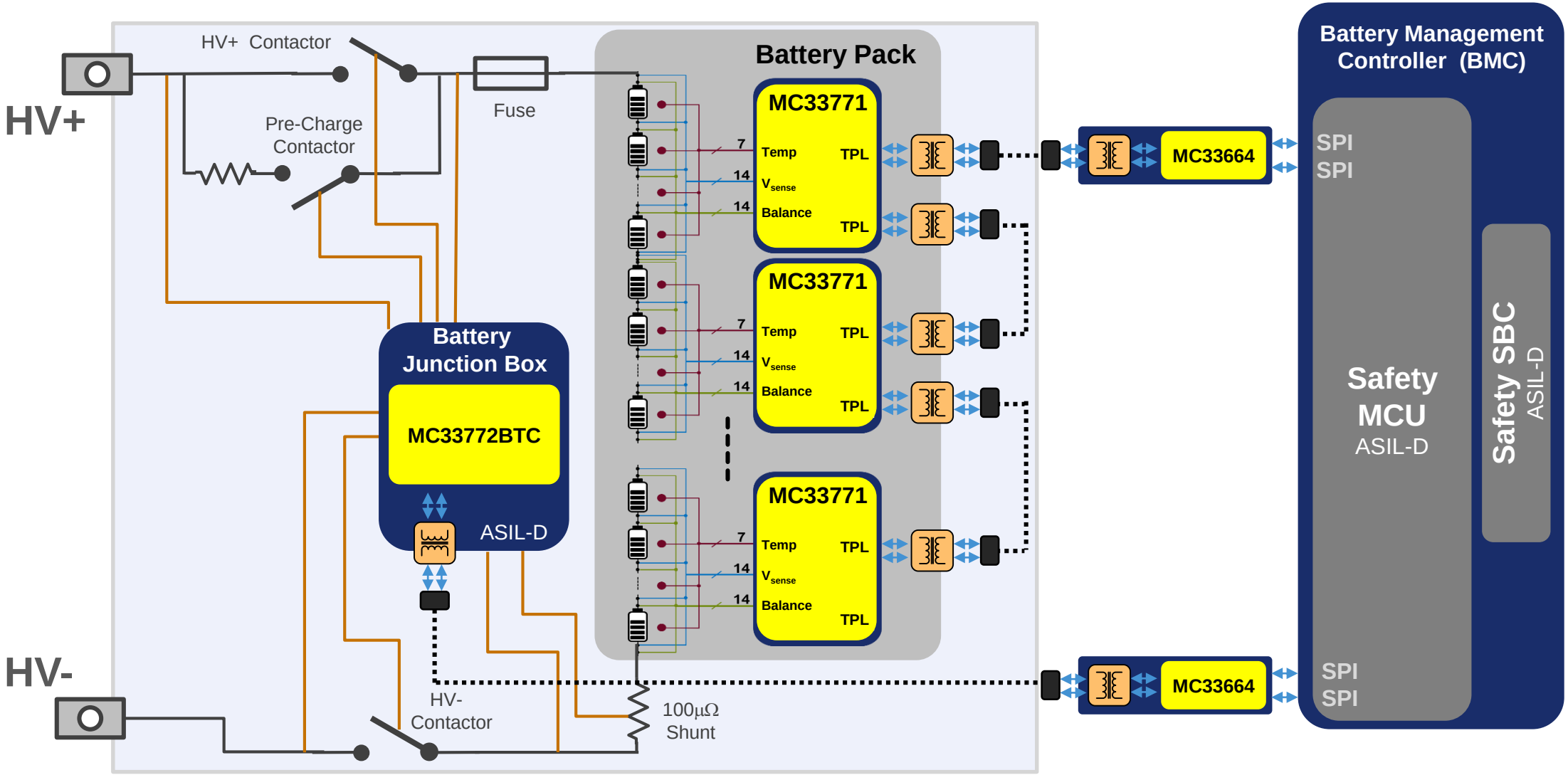

Wireless Battery Management

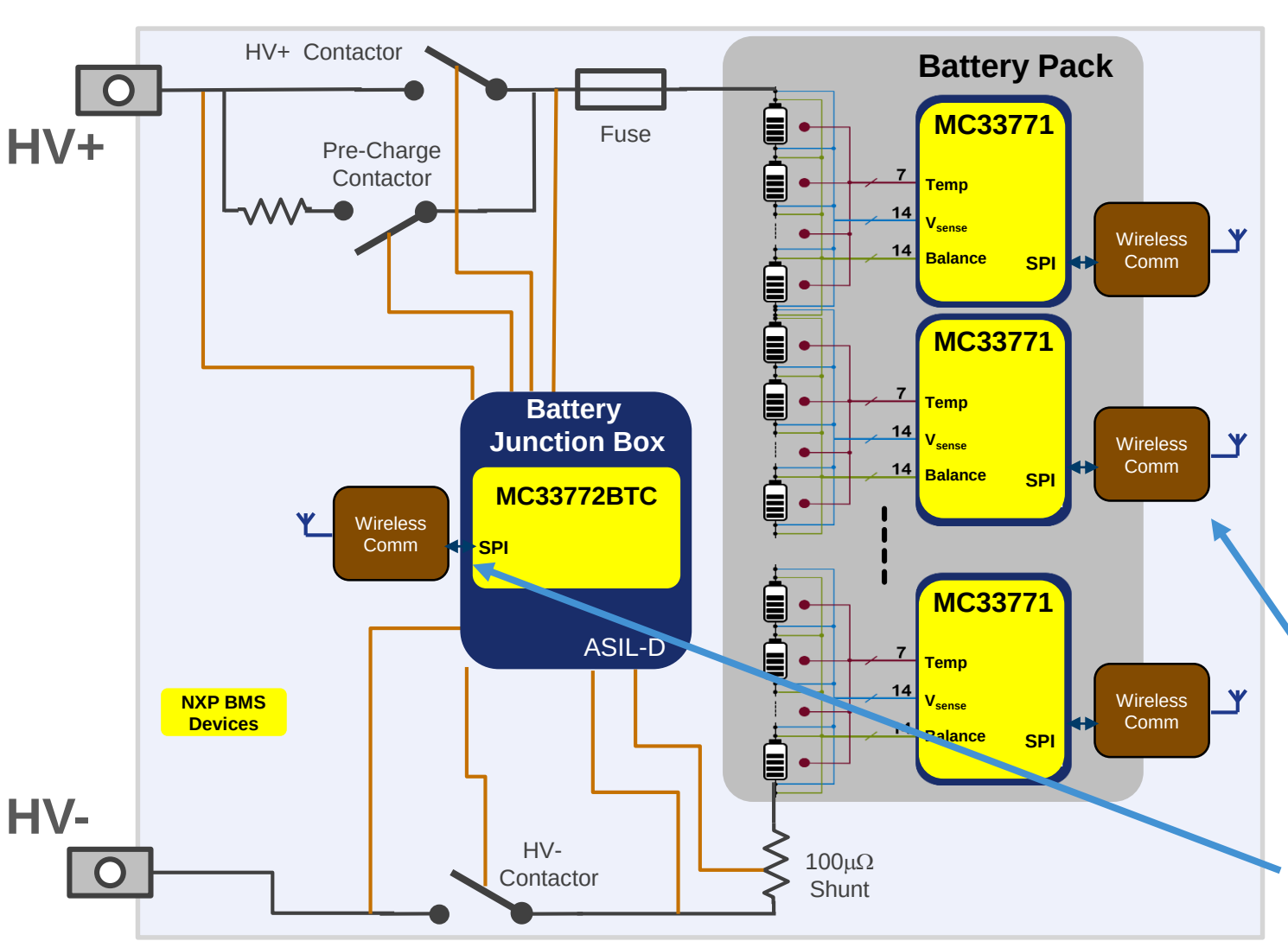

- 2.4G Radio (**BLE?**) on each CMC (Cell Monitoring Circuit)
- 2.4G Radio (**BLE?**) on BJB (Battery Junction Box)
- 2.4G Radio (**BLE?**) on BMC (Battery Management Controller)

Why Wireless BMS?

Drivers:

- Eliminates Isolation
- Simpler Assembly / Easier Maintanence
- Reduce Wiring / Connection Costs
- Reduce Failure Points
- **Safer?**

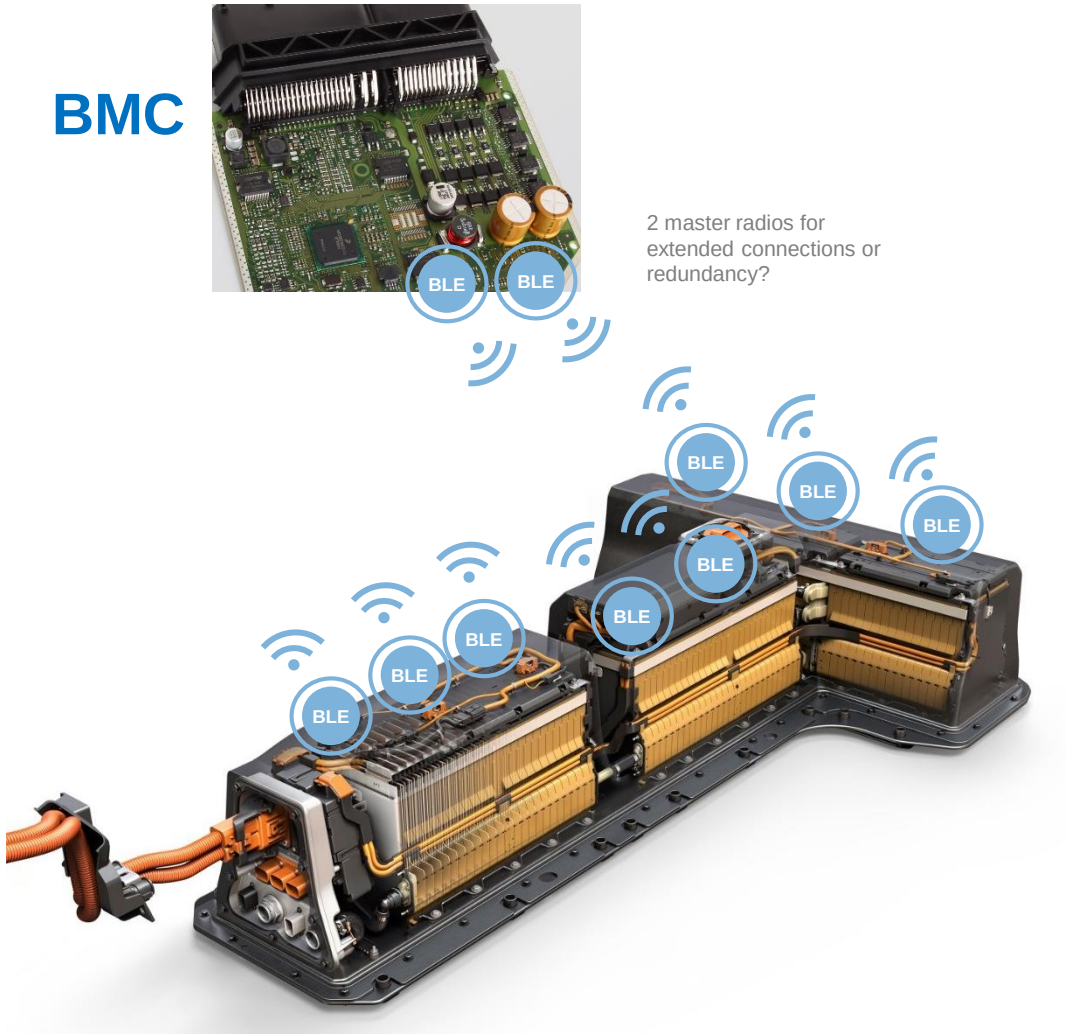

Wireless BMS Application

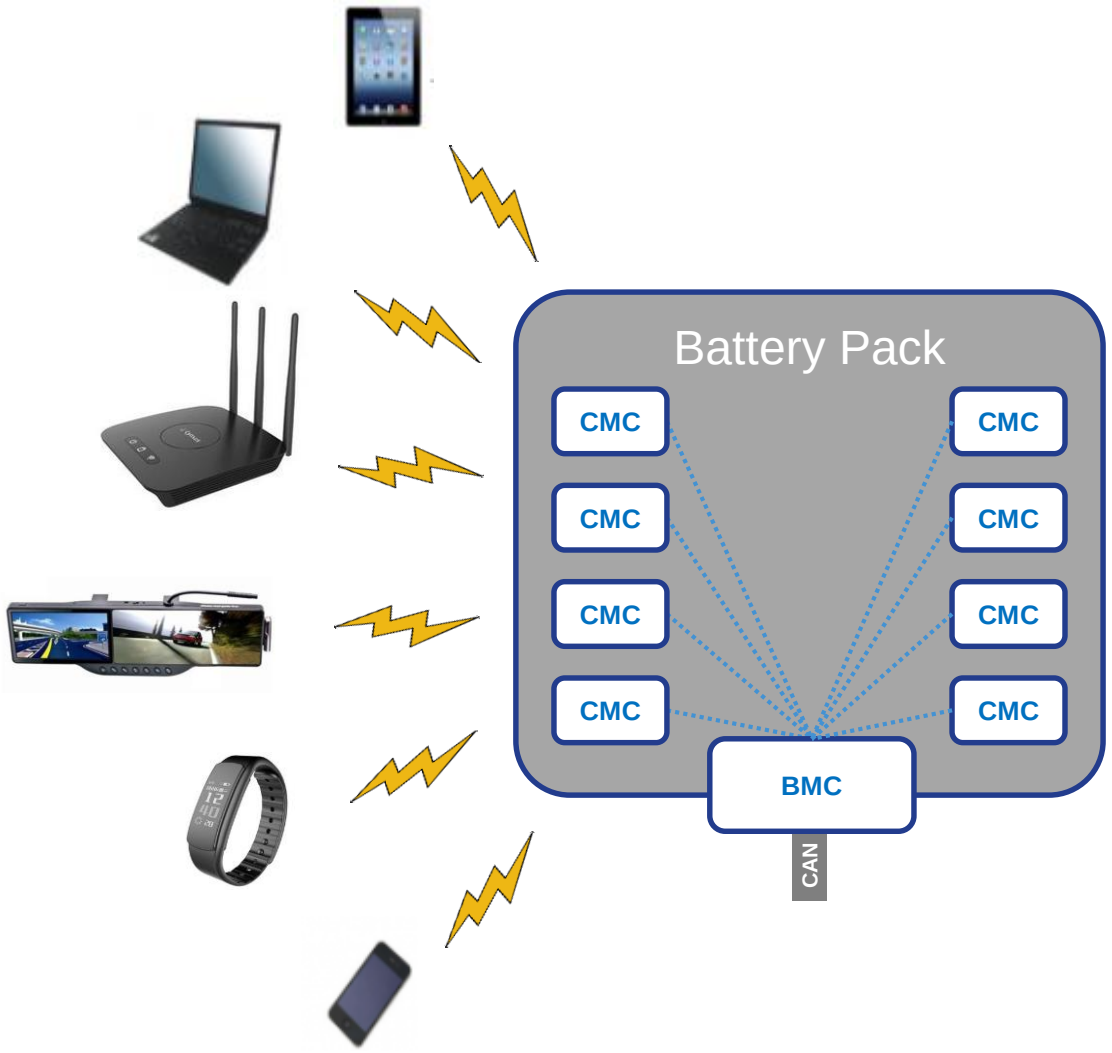

General BMS Application Requirements / Challenges

- Currently **2.4G technology** is seen as the **best choice**
  - **Wireless** BMS communication potentially **exposed** to public environment
  - **External 2.4G** devices will **impact** WBMS communication **quality**
  - Need **multiple** simultaneous **connections**
- **Tight air space** affecting RF communication?
- **Data polling time** should meet BMS application requirements
- **Network establishing time** should meet BMS application requirements
- **Synchronization** (Time Stamping) should meet BMS application
- **Over-the-air (OTA)** firmware updates shall be possible
- **ASIL-D** from **BMC** - may *require* ***redundant BLE masters***
- **EMI / EMC** is important
- **Low power consumption** is needed.
- **Secure Connection / Communication is REQUIRED!**

Kinetis KW35A/36A MCU Family | Features – BLE 5 + GFSK

Production: Available

Core/Memory/System

- Arm® Cortex®-M0+ running up to 48 MHz
- KW35: 512kB (2x256kB, swappable) Program Flash with ECC; or
- KW36: 256kB Program Flash + 256kB FlexNVM both with ECC;
- 64 kB SRAM
- KW36: 8 KB of user-segment defined byte write/erase EEPROM
- Four independently programmable DMA controller channels

Radio

- Support for BLE v5.0 and Generic FSK
- Rx Sensitivity, -95 dBm BLE / -25 to +3.5 dBm programmable output power
- Increased coexistence performance; Radio I/O for Wi-Fi coexistence
- 6.8 mA Rx & 6.1mA Tx (0dBm) current target (DC-DC enabled)
- Integrated balun (~9% board area savings)
- Support for 8 concurrent connections

Communications/HMI/Timers

- 2xSPI, LP-UART with LIN, 2xI2C, CMT, GPIO with IRQ capability (KBI)
- KW36: CAN-FD and 2nd UART with LIN
- 3x FlexTimer (TPM) with PWM & quadrature decode support
- Low Power (LPTMR), Programmable Interrupt (PIT) and RTC timers

Analog

- 16-bit ADC with integrated temp sense and battery monitor
- 6-bit High-speed Analog Comparator

Security

- AES Accelerator and True Random Number Generator
- Advanced flash security

Integrated DC/DC Converter

- Normal: 1.71V to 3.6V / Buck : 2.1V to 4.25V

Unique Identifiers

- 80-bit device ID programmed at factory
- 40-bit unique number can be used for Bluetooth Low Energy

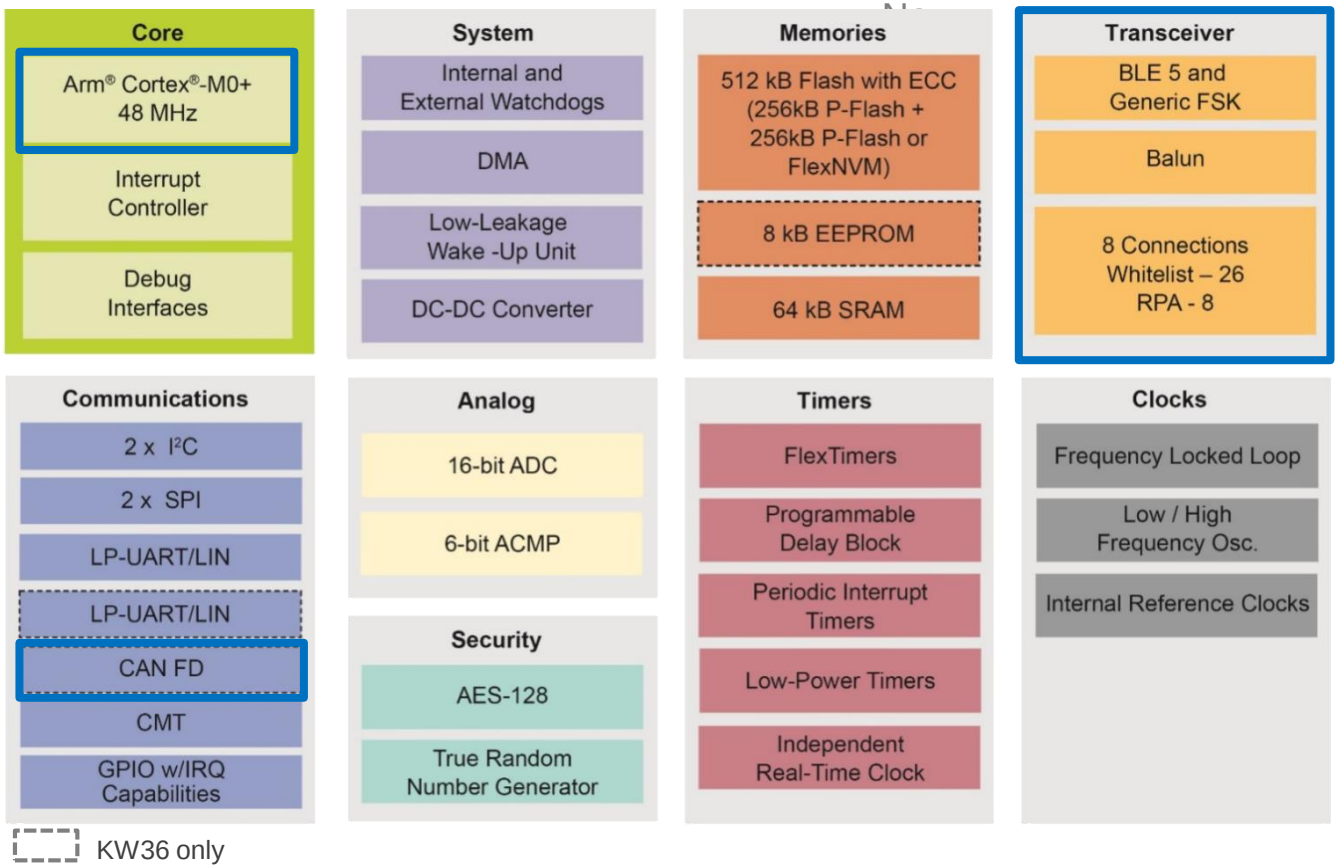

AEC Q100 Grade 2 (A version only)

Operating Range (Ambient): -40ºC to +105ºC

Kinetis KW37A/38/39A MCU Family | Block Diagram & IP Reuse

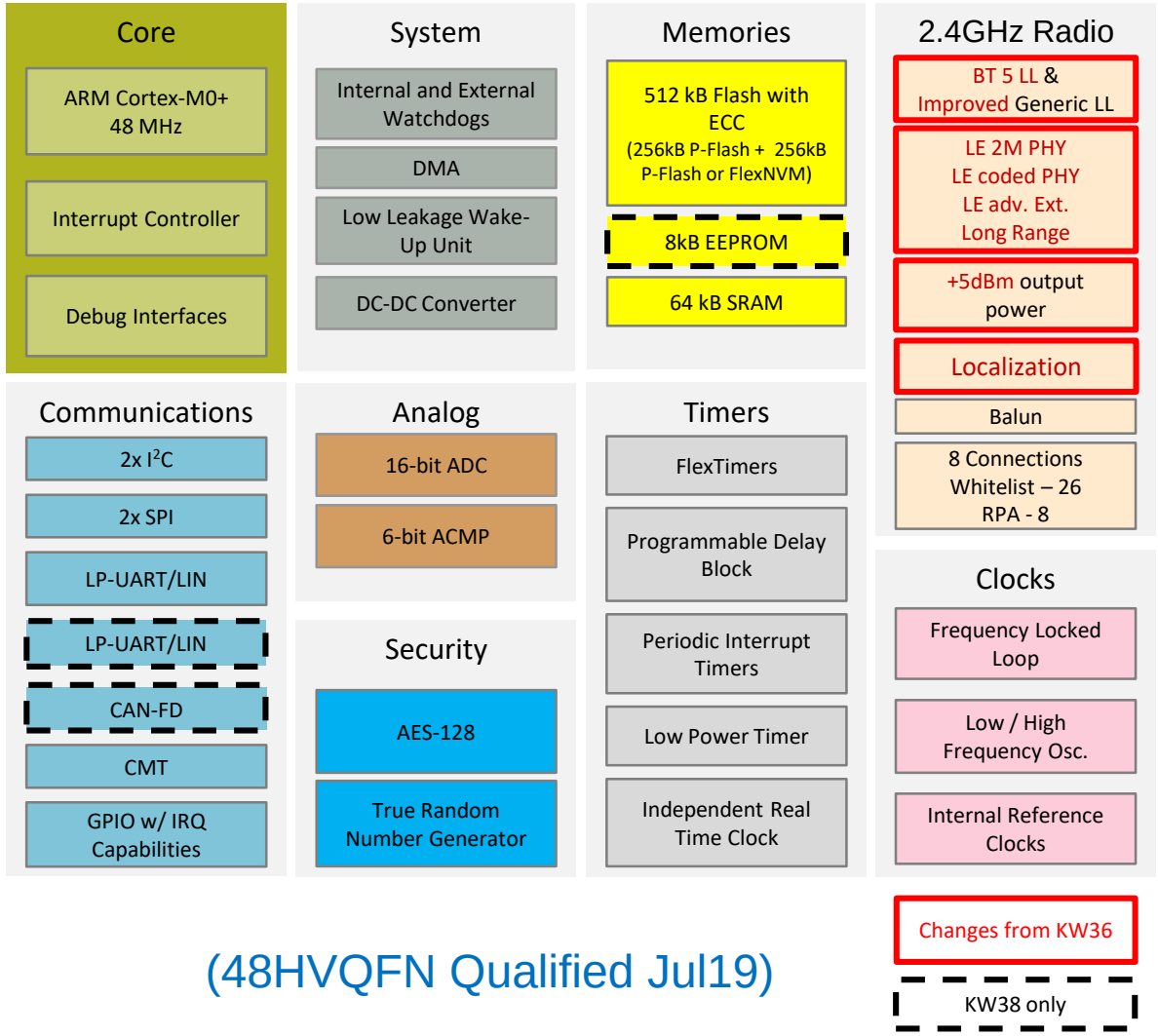

(48HVQFN Qualified Jul19)

New IP vs KW36A

- Full Bluetooth LE 5.0 compliant GFSK PHY (Digital IP)
- Bluetooth LE 5.0 Link Layer (Digital IP)
- Localization: Enhanced Distance Estimation & Direction Finding support (i.e., improved DMA, antenna switching and time-stamping)

Modified IPs vs KW36A

- Increase output power to +5dBm(Analog IP, option already available in KW36A that need to be qualified)
- Enhanced Generic Link Layer (with early support of Bluetooth LE 5.1 compliant Direction Finding Packet)

Pin-to-pin compatible with KW36A

- 7x7 wettable flanks 48HVQFN

Summary of BLE 5 Features

Bluetooth®

Version of Standard	Features	Description	Category	KW35/36A	KW37/38A
5.0	**Errata**	**Core spec Errata of 4.2**	**Mandatory**	☑	☑
	LE 2M PHY	Higher data rate	Optional	*x*	☑
	LE coded PHY	Longer range, reduced data rate support of 125/500kbps. Only available on LE 1M PHY	Optional	*x*	☑
	LE advertising extensions	Enable longer advertising packet, more advertising channels, and more advertising type	Optional	*x*	☑
	High Duty Cycle Non-connectable Advertising	Reduced the minimum advertising interval for non-connectable advertising, enable high duty cycle beacon	Optional	*x*	☑
	LE Channel Selection Algorithm #2	Enable channel selection in sub-event	Optional	*x*	☑

Example Data to Transfer

CMC (~50 bytes)

- Fault Status (6 bytes)
- Up to 14 cells (28 bytes)
- Up to 7 Analog / GPIO inputs (14 bytes)
- IC temp (2 bytes)
- CRC-16 (2 bytes)
- Other Info?? (8 bytes)

BJB (~24 bytes)

- Fault Status (6 bytes)
- Stack Voltage (2 bytes)
- Pack Current (2 bytes)
- Coulomb Counter (4 bytes)
- CRC-16 (2 bytes)
- Other Info?? (8 bytes)

Low Data Rate Needed

Can LE coding be used to improve communication robustness?

BLE 5.0

- **2Mbps** (same as TPL daisy chain but BCC comm happens concurrently)
- Overhead 22 bytes (includes CRC)
- Data Payload up to **244 bytes**
- Connection intervals from 7.5ms to 4s (1.25ms increments)

Packet format for Uncoded LE data packets

<table>
<tr><th>Preamble</th><th>Access Address</th><th colspan="6">PDU (2-257 bytes)</th><th>CRC</th></tr>
<tr><td rowspan="4">1 byte (1M PHY) 2 bytes (2M PHY)</td><td rowspan="4">4 bytes</td><td>LL Header</td><td colspan="4">Payload (0-251 bytes)</td><td rowspan="2">MIC (Optional)</td><td rowspan="4">3 bytes</td></tr>
<tr><td rowspan="3">2 bytes</td><td>L2CAP Header</td><td colspan="3">ATT Data (0-247 bytes)</td></tr>
<tr><td rowspan="2">4 bytes</td><td colspan="2">ATT Header</td><td>ATT Payload</td><td rowspan="2">4 bytes</td></tr>
<tr><td>Op Code</td><td>Attribute Handle</td><td rowspan="2">Up to 244 bytes</td></tr>
<tr><td></td><td>1 byte</td><td>2 bytes</td><td></td></tr>
</table>

NXP WBMS Demo (Based on MC33771B & KW36)

Wireless MCU:

- Lower power consumption
- **Customized BLE5.0** protocol for BMS
- OTA supported
- Up to **8 concurrent connections** with 1 master
- Stable communication(Frequency hopping, repeat …)
- Security management **(AES-128)**
- Communication Distance < 30m
- Wireless link maintained by KW36 hardware.
- -25 to +3.5 dBm programmable output power
- Rx Sensitivity, -95 dBm BLE

AFE:

- 9.6 V ≤ VPWR ≤ 61.6 V operation, 75 V transient
- 7 to 14 cells management
- 4Mbps **SPI communication** with **MCU**
- 100mA cell balancing current, 300mA capability at max
- 6 channel external temperature sensing , 1 channel on board temperature sensing for cell balancing resistors.
- Full diagnostic functions

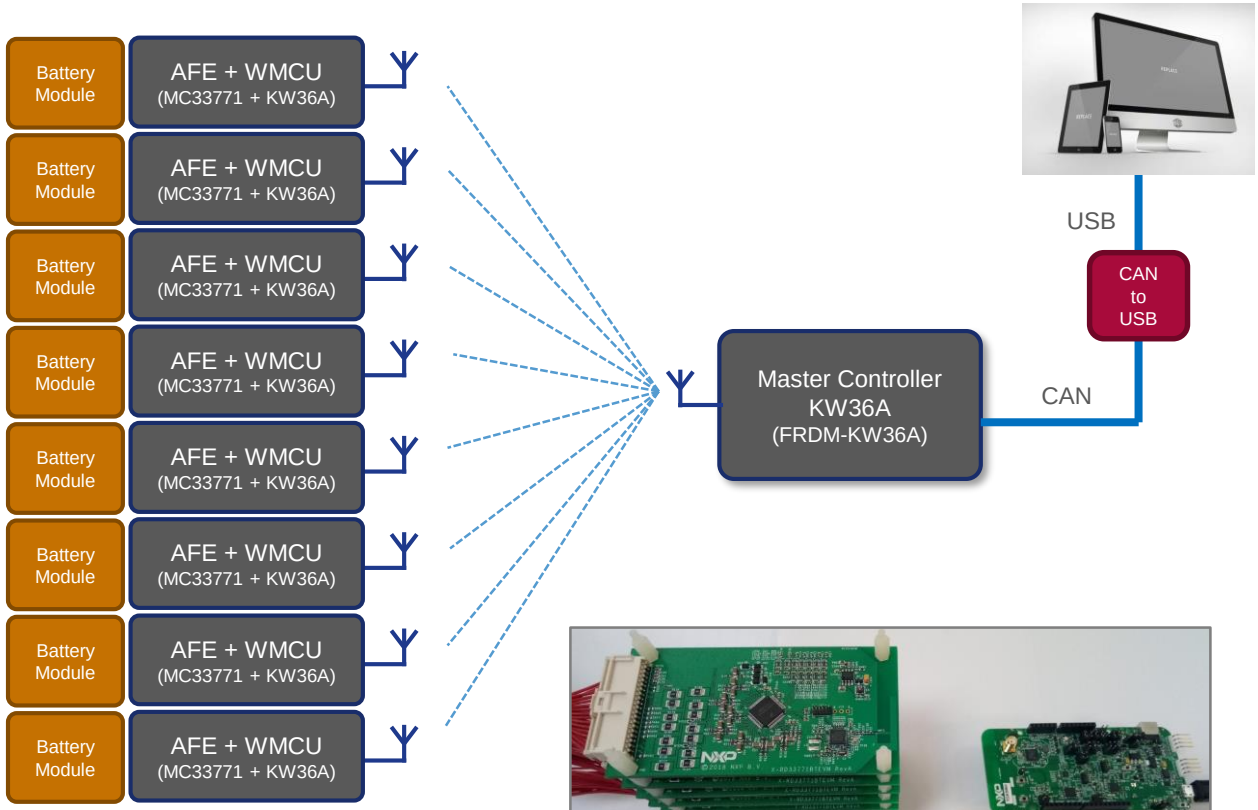

8 nodes simultaneous connection

NXP WBMS Demo (Based on MC33771B & KW36)

- Star architecture – 1 master / 8 slaves

- Voltage measurement (14 channels / slave – 112 total)
- Temp Measurement (6 external + 1 on-board / slave)
- Cell Balancing – 100mA

- Wireless Baud Rate – 1Mbps
- Wireless Payload – 60 bytes (up to 255 bytes max)
- Wireless Security - AES-128
- Wireless Timestamp
- Polling time – 60ms
- Network establishing time – 120-500ms
- Functional Safety – ASIL D by BMC (ASIL-C/QM)

Enablement

MC3377xEVB, Battery Emulators, FRDM-KW36

Battery Cell Controller Enablement

MC33771 EVBs (14 cell)

- For **TPL** Communication
- For **SPI** Communication

MC33772 EVBs (6 cell)

- For **TPL** Communication
- For **SPI** Communication

FRDM-KW36A

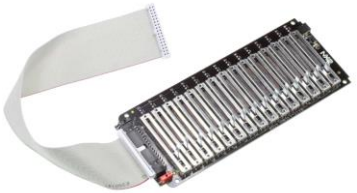

14-Cell Emulator

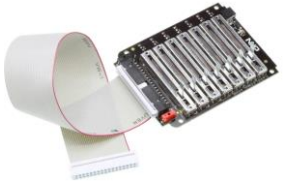

6-Cell Emulator

14cell – AAA-PACK

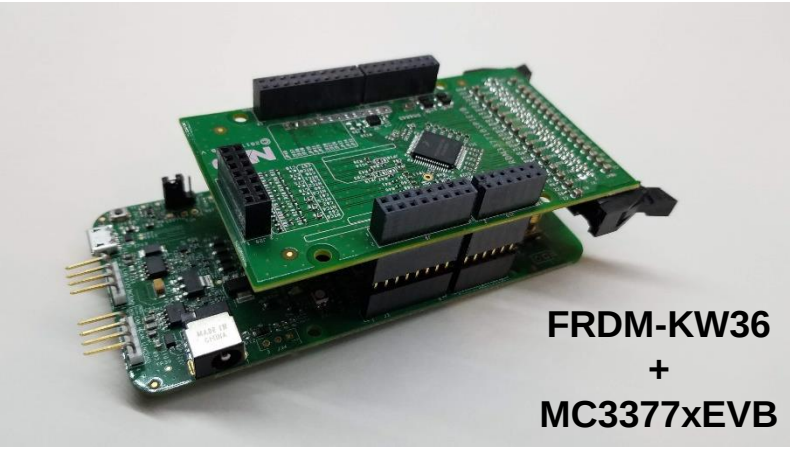

Summary

Wireless Communications can:

- Eliminate Isolation
- Provide Simpler Assembly / Easier Maintanence
- Reduce Wiring / Connection Costs
- Reduce Failure Points
- **Safer?**

Wireless Challenges:

- Secure Connections
- Secure Communications
- Robust Communications
- ASIL-D Conformance
- Cost ?? – Still need to do full system level cost analysis

Tech Days Detroit 2019: Electrification Session

Room	October 8	Hour
Galilee	AMF-AUT-T3631 Scalable and Safe Power Management Solutions for Automotive Market	10:00AM-10:50AM
	AMF-AUT-T3832 Electrification Functional Safety Backbone Solutions to Attach with S32	11:10 AM – 11:50 AM
Samuel	AMF-AUT-T3819 Entry-Level Solutions for EV/HEV Applications	10:10 AM – 10:50 AM
	AMF-AUT-T3626 Next-Generation Processor Solutions for Advanced H/Evs and Safety Domains Controllers	11:00 AM – 11:50 AM
Room	**October 9**	**Hour**
Nazareth	AMF-AUT-T3827 Wireless BMS	11:00AM-11:50AM
	AMF-AUT-T3659 Functional Safety Concept of High-Voltage Traction Inverter	1:30PM-2:20PM
Wisdom	AMF-AUT-T3828 BMS for Drones and Small Systems Incorporating Automotive Components	4:00PM-4:50PM
Samuel	AMF-AUT-T3627 Cost-Optimized HV BMS Based on MC33771 revC	10:00AM-11:00AM

SECURE CONNECTIONS
FOR A SMARTER WORLD