AUTOMOTIVE SECURITY PRODUCT FEATURES

JOHN COTNER

AMF-AUT-T2696 | JUNE 2017

SECURE CONNECTIONS
FOR A SMARTER WORLD

THE CONNECTED CAR …

A cloud-connected computer network on wheels

- **A networked computer**
  - up to 100 ECUs per car
  - and many sensors
  - inter-connected by wires
  - more and more software

- **Increasingly connected to its environment**
  - to vehicles & infrastructure
  - to user devices
  - to cloud services

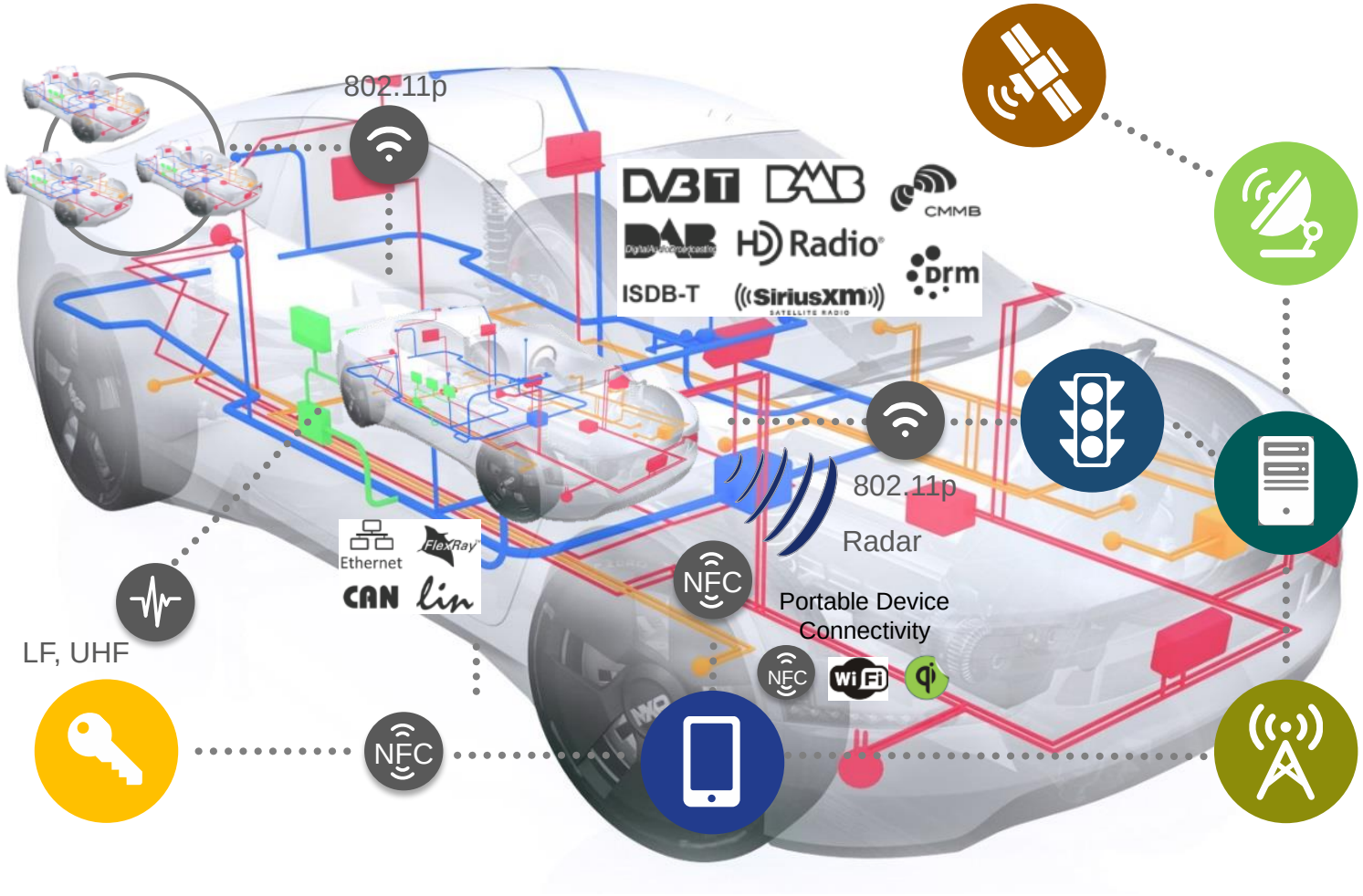

… IS AN ATTRACTIVE TARGET FOR HACKERS!

Valuable Data

- Collection of data/info
- Storage of data
- Diagnostic functions

Protect Privacy

High Vulnerability

- Increasing number of nodes
- More advanced features
- X-by-Wire

Increase Safety

Easy (Remote) Access

- Fully Connected Car
- External & internal interfaces
- Wired & wireless interfaces

Prevent Unauthorized Access

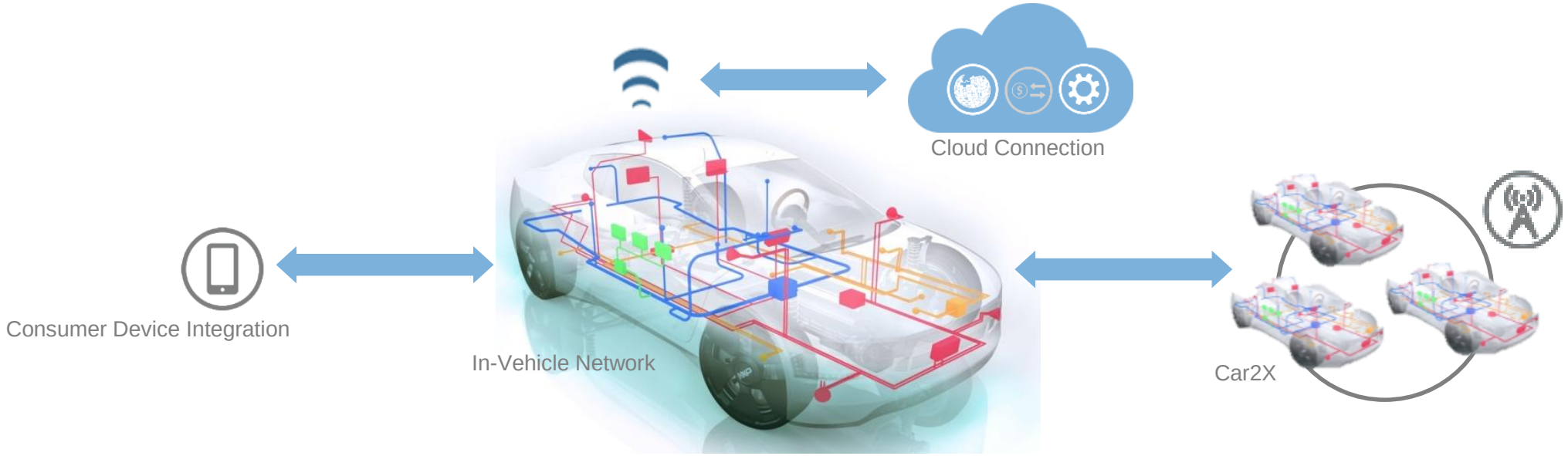

CAR HACKING IS ‘HOT’ …

c't magazin

Startseite | Artikel | Hotline & FAQ | Blog | Aktuell

Magazin | Internet | Software | Hardware | Know-how | Praxis | Editorial | Prozessorgef

c't > Magazin

Dieter Spaar, Translation: Fabian A. Scherschel 05.02.2015

Beemer, Open Thyself! – Security vulnerabilities in BMW's ConnectedDrive

JALOPNIK

Damon Lavrinc

Filed to: CAR HACKING 2/18/15 5:40pm

How A 14-Year-Old Hacked A Car With $15 Worth Of Radio Shack Parts

Forbes / Security

2 FREE Issues of F

JUL 14, 2015 @ 12:00 PM 26,209 VIEWS

Tesla Model S Digital Weaknesses To Be Exposed By Hackers Next Month

Hackers Remotely Kill a Jeep on the Highway—With Me in It

BUSINESS | DESIGN | ENTERTAINMENT | GEAR | SCIENCE | SECURITY

ANDY GREENBERG SECURITY 07.21.15 6:00 AM

HACKERS REMOTELY KILL A JEEP ON THE HIGHWAY—WITH ME IN IT

BBC | Sign in | News | Sport | Weather | Shop | Earth | More

NEWS

Home | Video | World | UK | Business | Tech | Science | Magazine | Entertainment & Arts

Technology

Car hack uses digital-radio broadcasts to seize control

By Chris Vallance 22 July 2015

engadget

OnStar hack remotely starts cars, GM working on a fix

by Jessica Conditt | @jesscondit | July 30th 2015 At 1:58pm

… AND IT'S REAL!

- Hackers took over the control of a Jeep, that was driving on the highway, from their basement
- Did it come as a surprise? Not really…

Report - The Most Hackable Cars (Aug. '14)

"2014 Jeep Cherokee, 2015 Cadillac Escalade and 2014 Toyota Prius were the most hackable."

"The most hackable cars had the most [computerized] features and were all on the same network and could all talk to each other."

"The least hackable ones had [fewer] features, and [the features] were segmented, so the radio couldn't talk to the brakes."

Charlie Miller, security engineer

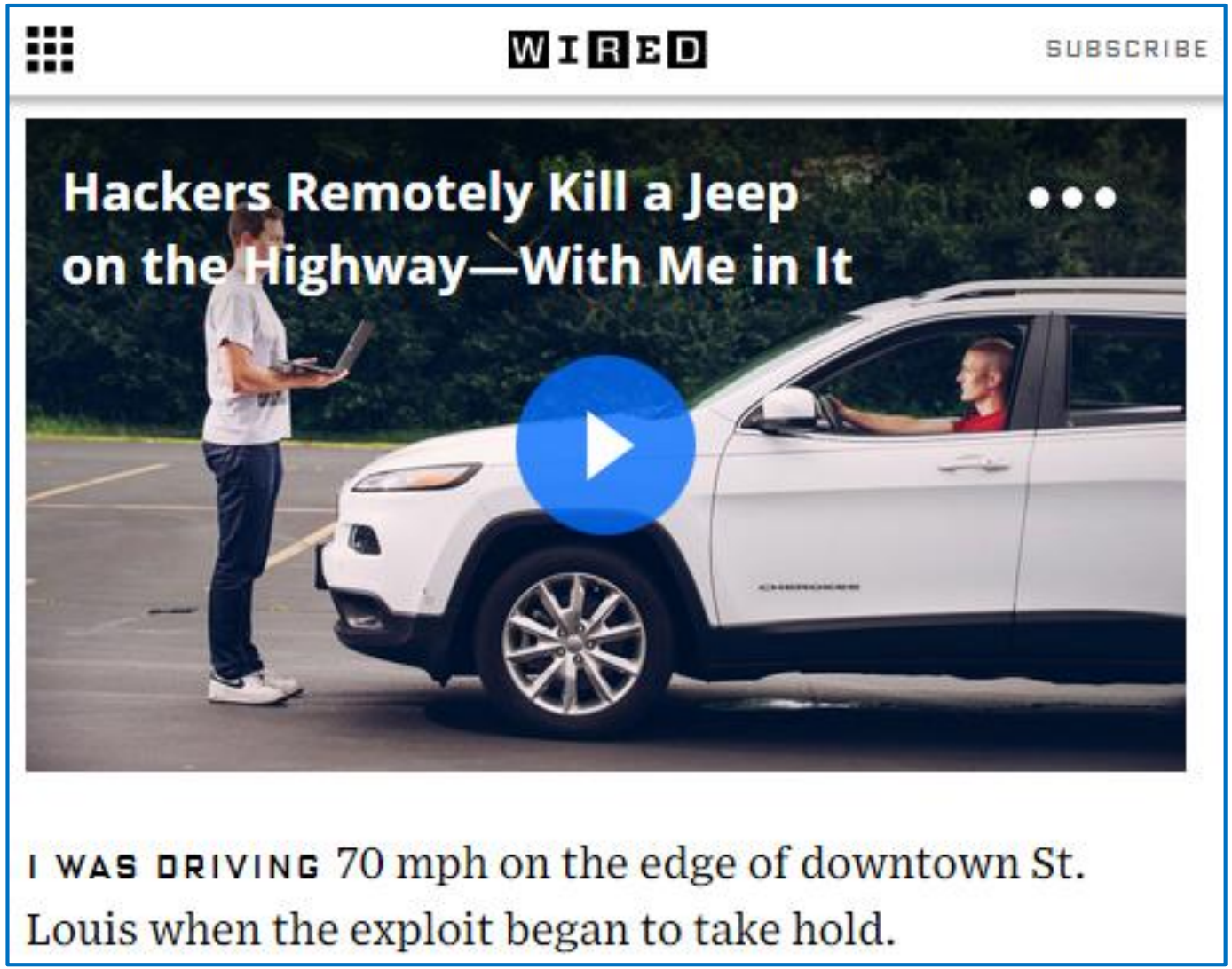

http://www.wired.com/2015/07/hackers-remotely-kill-jeep-highway/

The paper: http://illmatics.com/Remote%20Car%20Hacking.pdf

01.

WHAT IS SECURITY?

WHAT IS SECURITY?

- Security is a **quality aspect**…
  - Attackers should not be able to subvert the proper operation of a system
- …in an **uncontrolled** and **evolving environment**
  - Attackers do not obey to “the rules”
  - Attack(er)s only get better over time
- Security must be an **integral part of the system design**
  - Security is as strong as the weakest link → point solutions usually don’t work
  - Secure by design *vs.* security as an afterthought
- System security solutions are (usually) **custom-made**
  - Different use cases & architectures may (will) require different security solutions
  - But they often use **generic building blocks**
- **100% secure** (or safe) **does not exist** in the real world
  - The challenge is to find the right balance between risk and protection (cost)

02.

OUR APPROACH TO SECURITY

Core Cyber Security Principles

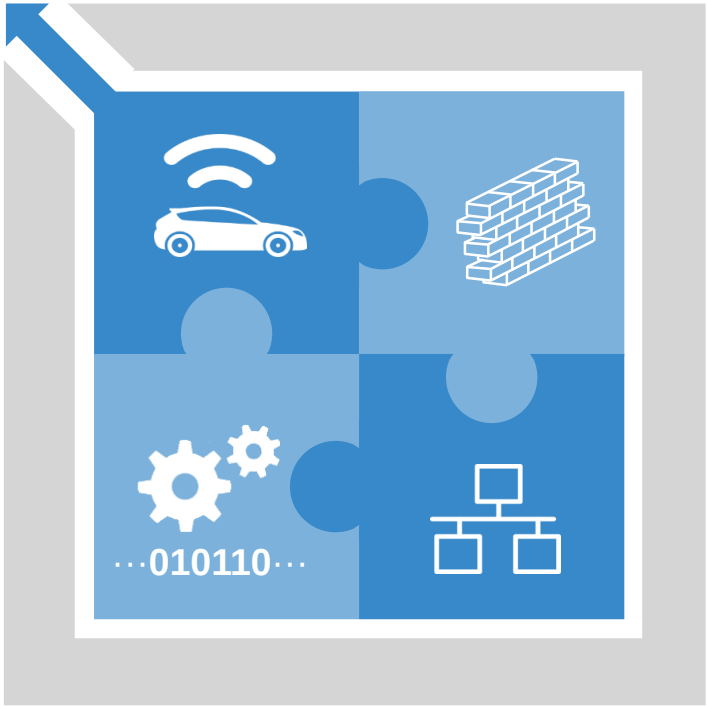

- **These are the core security principles:**
  - Secure external interfaces
  - Secure domain isolation
  - Secure internal communication
  - Secure software execution
- **They need to be in place in *any* E&E network**
  - Regardless of the actual architecture and implementation

Explanation of the Core Cyber Security Principles

Principle	Concerns	Examples
secure external interfaces	• Who is trying to access my network, and for what purpose? • How to prevent spoofing, data manipulation and/or theft?	• Only the OEM server can send firmware updates • Only real vehicles & infra can send V2X messages
secure domain isolation	• How to separate domains (with different criticalities)? • How should they (in a controlled manner) be able to interact?	• The infotainment system can receive position & speed • But it cannot send control messages to the brakes
secure internal communication	• Who is on my network? And who is sending messages? • How to prevent data manipulation (or theft)?	• Only genuine ECUs can be installed in the network • Messages cannot be replayed (repeated)
secure software execution	• How do I ensure that software cannot be modified (hacked)? • How do I enable secure updating (/ fixing) of the software?	• Monitoring execution (run-time integrity checks) • Secure boot / firmware image verification
*perimeter security **	• How to prevent people from getting close to the electronics? • How to prevent unauthorized access to (/use of) a vehicle?	• Install the electronics systems behind steel & glass • (Electronic) door locks

* Perimeter security forms an important aspect of *physical security* for vehicles, but it is *not* a cyber security principle. As such, perimeter security is only listed here for completeness. In other words: one must *not* rely on perimeter security for the protection of the electronic systems against cyber attacks. For example, electronic car access systems must be protected against cyber attacks using the 4 principles listed above.

4 LAYERS TO SECURING A CAR

Layer 1: **Secure Interface**

Secure M2M authentication, secure key storage

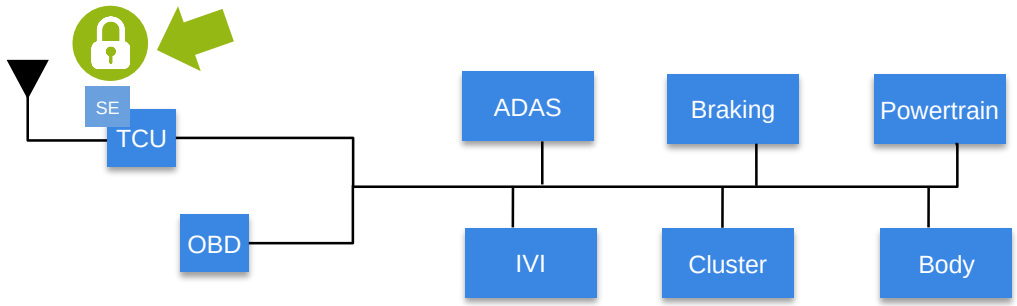

Layer 2: **Secure Gateway**

Domain isolation, firewall/filter, centralized intrusion detection (IDS)

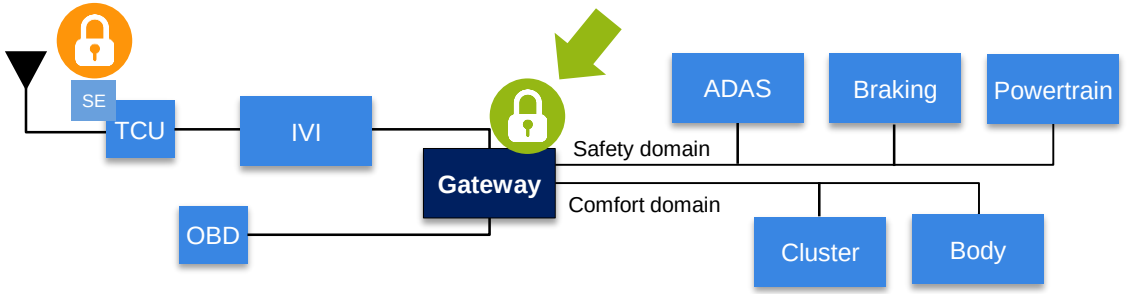

Layer 3: **Secure Network**

Message authentication, CAN ID killer, distributed intrusion detection (IDS)

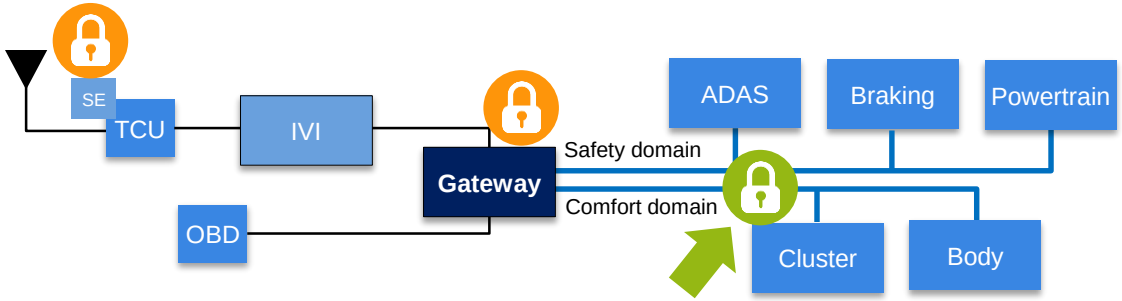

Layer 4: **Secure Processing**

Secure boot, run time integrity, OTA updates

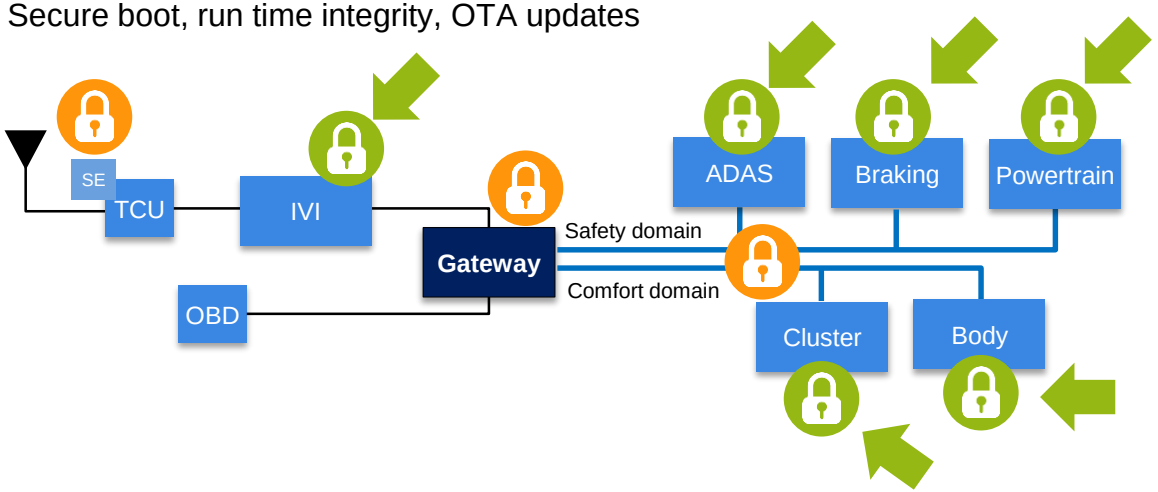

03.

Secure Element

SECURE ELEMENT – OVERVIEW

- **Secure authentication of users, devices and messages**
  - Automotive (M2M): V2X communication, Telematics (online services), …
  - Traditionally (user): banking cards, electronic passports, …

- **Implemented on a tamper-resistant platform…**
  - Securely hosts security applications and their confidential data
  - Protected against physical attacks (SCA, reverse engineering, …)
  - Proven security, via 3rd party evaluation and certification (Common Criteria, EMVCo, FIPS 140, …)

- **…that provides:**
  - secure crypto processing (AES, RSA, ECC, TRNG, …)
  - secure (crypto) key generation & storage
  - secure certificate handling (validate & store)

Form factors:

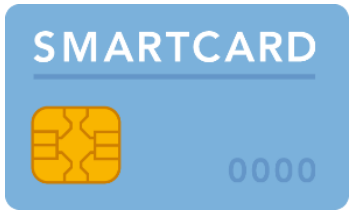

smart card

embedded Secure Element (eSE)

Example applications:

mobile payment

2nd factor user auth.

V2X communication

electronic passport

SECURE ELEMENT ≠ SECURE MCU

(Secure) MCUs are optimized for performance & flexibility:

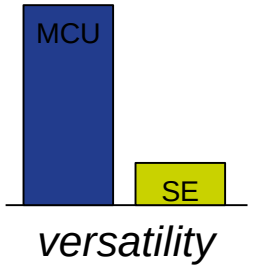

- General purpose applications vs. crypto-only
- High performance, large memories, multiple interfaces
- Protection against logical attacks only (typically)

➔ **Increased robustness for in-car systems**

Secure Elements are optimized for security:

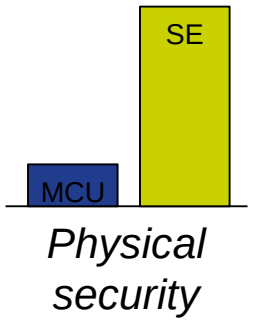

- Crypto-only applications (payment, M2M authentication, …)
- Protection against “million dollar attack” (vs. 10 dollar attacks)
- Highly-secure architecture protects against physical attacks

➔ **Physical protection for external interfaces**

LOGICAL SECURITY VS. PHYSICAL SECURITY

REMOTE / ONLINE / LOGICAL ATTACKS

- Targeting devices that are remotely accessible
- Attack Potential: (enhanced) basic

Cyber Attacks

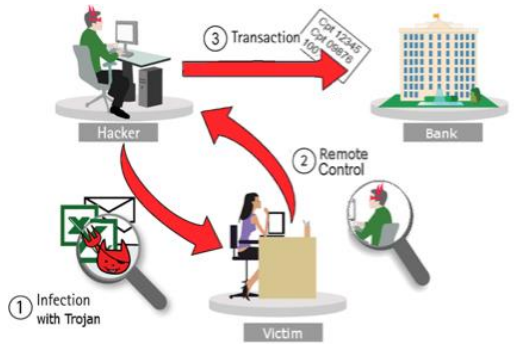

LOCAL / OFFLINE / PHYSICAL ATTACKS

- Targeting devices that live in a hostile environment
- Attack Potential: moderate to high

Fault Injection

Invasive Attacks

Information Leakage Attacks

LOGICAL SECURITY VS. PHYSICAL SECURITY

REMOTE / ONLINE / LOGICAL ATTACKS

- Targeting devices that are remotely accessible
- Attack Potential: (enhanced) basic

Cyber Attacks

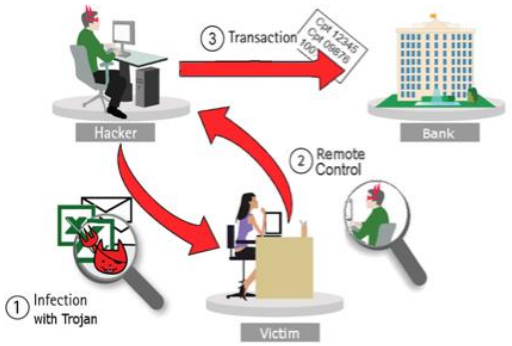

FUNCTIONAL SECURITY

- “Internet security” with strong crypto, secure protocols, secure boot, e2e security, authentication
- Supported by hardware (for isolation, acceleration)
- Implementation is not important: a skilled attacker in possession of a device will hack it

LOCAL / OFFLINE / PHYSICAL ATTACKS

- Targeting devices that live in a hostile environment
- Attack Potential: moderate to high

Fault Injection

Invasive Attacks

Information Leakage Attacks

PHYSICAL SECURITY

- Functional security, **plus** protection against physical attacks such as side-channel analysis, fault injection, reverse engineering, etc.
- Supported by dedicated, hardened hardware (providing a high level of tamper-resistance)
- Implementation of HW & SW matters: high resistance against a skilled attacker in possession of the device

LOGICAL SECURITY VS. PHYSICAL SECURITY

REMOTE / ONLINE / LOGICAL ATTACKS

- Targeting devices that are remotely accessible
- Attack Potential: (enhanced) basic

Cyber Attacks

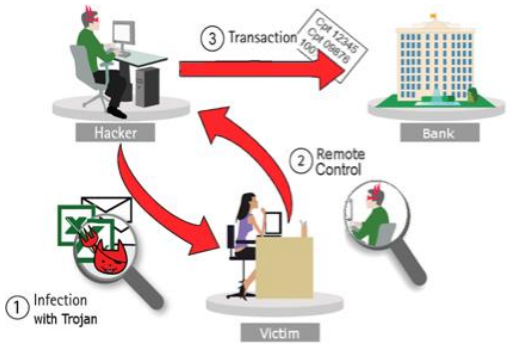

FUNCTIONAL SECURITY

MCU / MPU / TRX

LOCAL / OFFLINE / PHYSICAL ATTACKS

- Targeting devices that live in a hostile environment
- Attack Potential: moderate to high

Fault Injection

Invasive Attacks

Information Leakage Attacks

PHYSICAL SECURITY

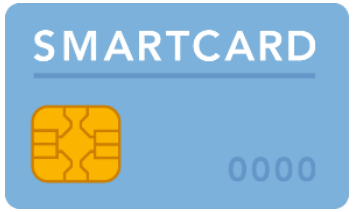

smart card

embedded Secure Element (eSE)

CLASSIFICATION OF PHYSICAL IC ATTACKS

Countermeasures ("tamper-resistance") require very specific IC designs…

Invasive Attacks *"By permanent modification"*	**Semi-Invasive (Fault) Attacks** *"By temporarily changing the state"*	**Non-Invasive Attacks** *"By observing"*
Reverse Engineering Delayering 	Global And Local Light Attacks	Photo emission Analysis
Micro-probing Forcing Manipulation 	Alpha Particle Penetration	EMA Analysis
Electron Microscopy Atomic Force Microscopy (AFM)	Spike/Glitch injection	Timing Analysis
Contrast Etching Decoration		SPA/DPA Analysis

emerging attacks (in IoT/Automotive)

ChipWhisperer: $130 kit (open source software, hardware and training).
Objective: enable engineers/hobbyists to perform side-channel attacks.

SECURE ELEMENT – HARDWARE PLATFORM

Highest level of protection against the most advanced physical attacks

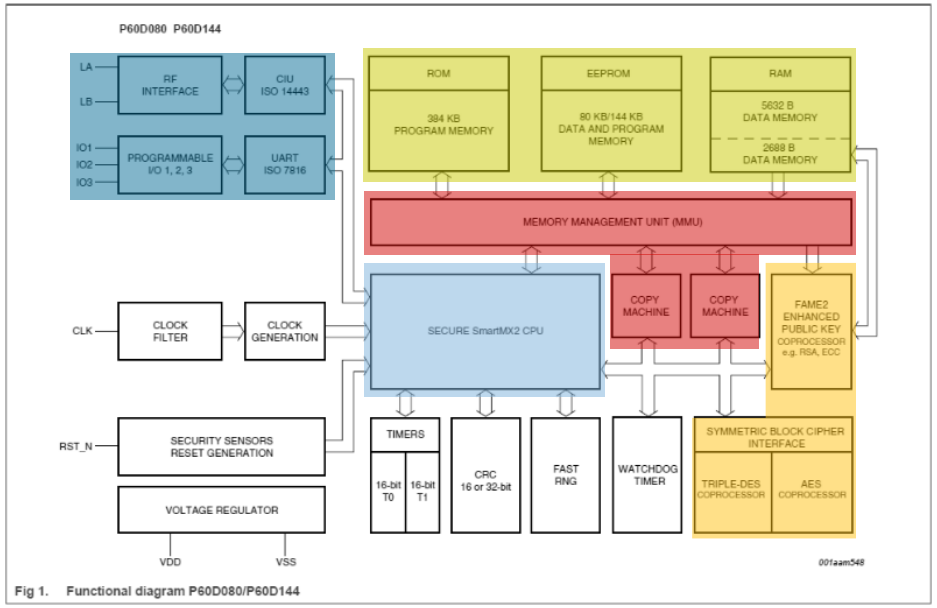

Fig 1. Functional diagram P60D080/P60D144

Legend:

Microcontroller	Memories (ROM, RAM EEPROM)
MMU + copy machines (DMA)	Interfaces (ISO 7816, ISO 14443)
Crypto co-processors (3DES, AES, RSA, ECC)	

Features:

- A tamper-resistant platform, protecting against:
  - Side channel attacks, fault injection, physical reverse-engineering, …
- Securely hosts security applications and their confidential data
- Programmable platform, with Java Card OS
  - Interfaces: ISO 7816, I2C, SPI, NFC
- Cryptolib supported by accelerators:
  - (3)DES, AES, RSA, ECC, SHA(2), TRNG
- Proven security via 3rd party assessments
  - Common Criteria EAL6+, EMVCo, …

SECURE JAVA CARD OS (JCOP)

Rich platform, enabling fast software development

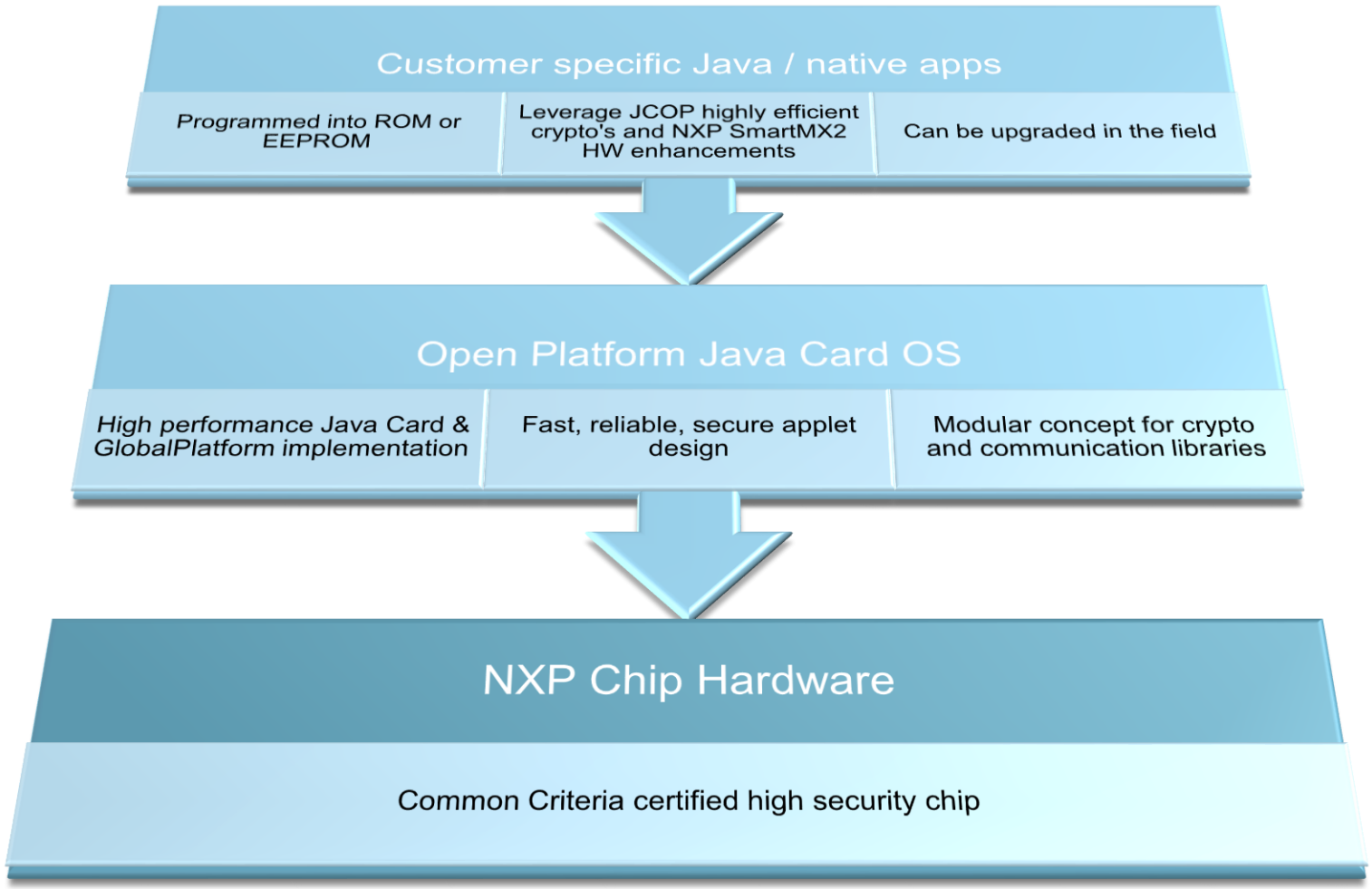

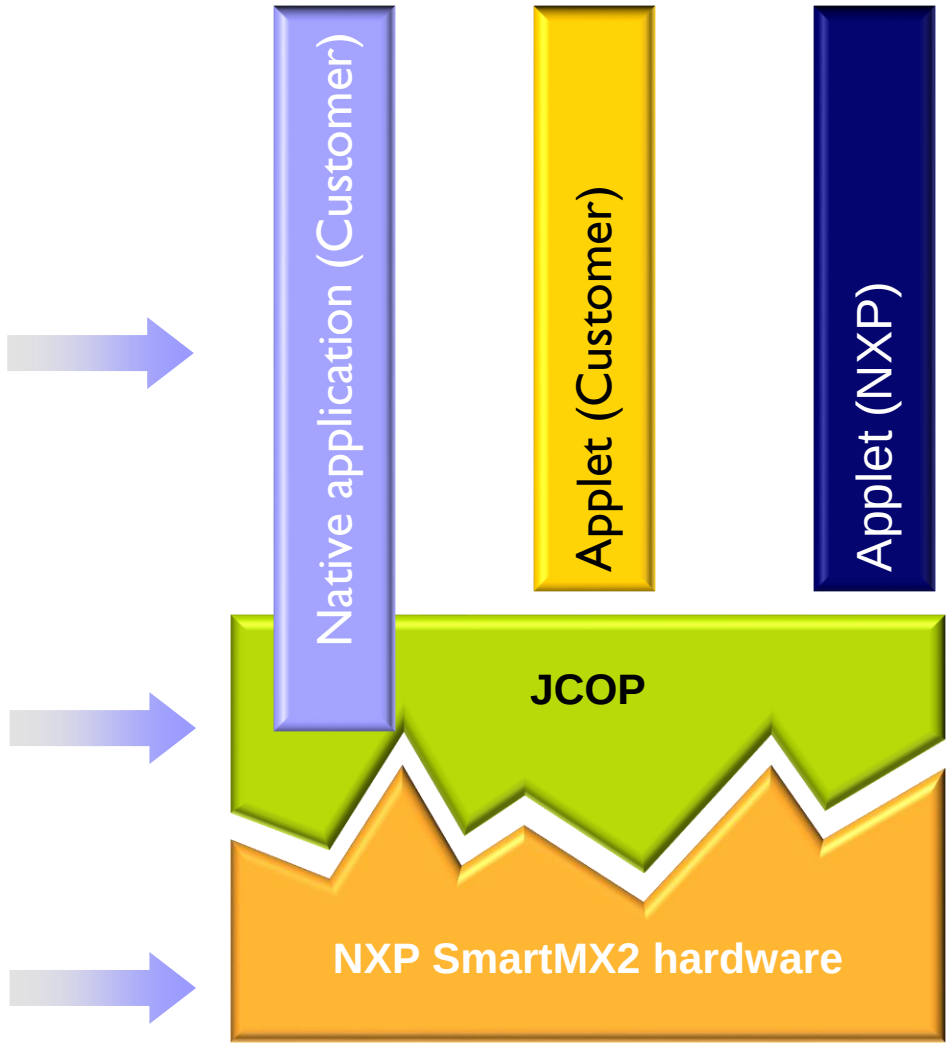

Location in the Vehicle E&E architecture

Secure TCU (external interface oriented)

Secure M2M authentication, secure key storage

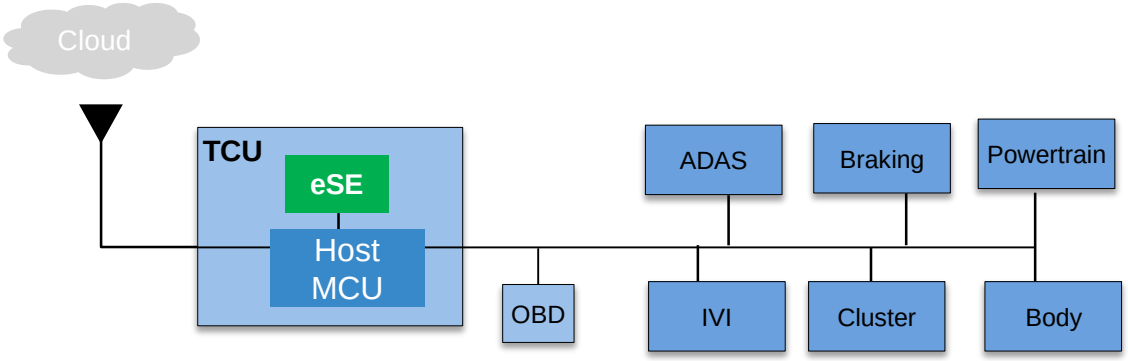

Secure connected Gateway

Central node managing data streams and access rights (M2M, secure key storage), Domain isolation, firewall/filter, centralized intrusion detection (IDS).

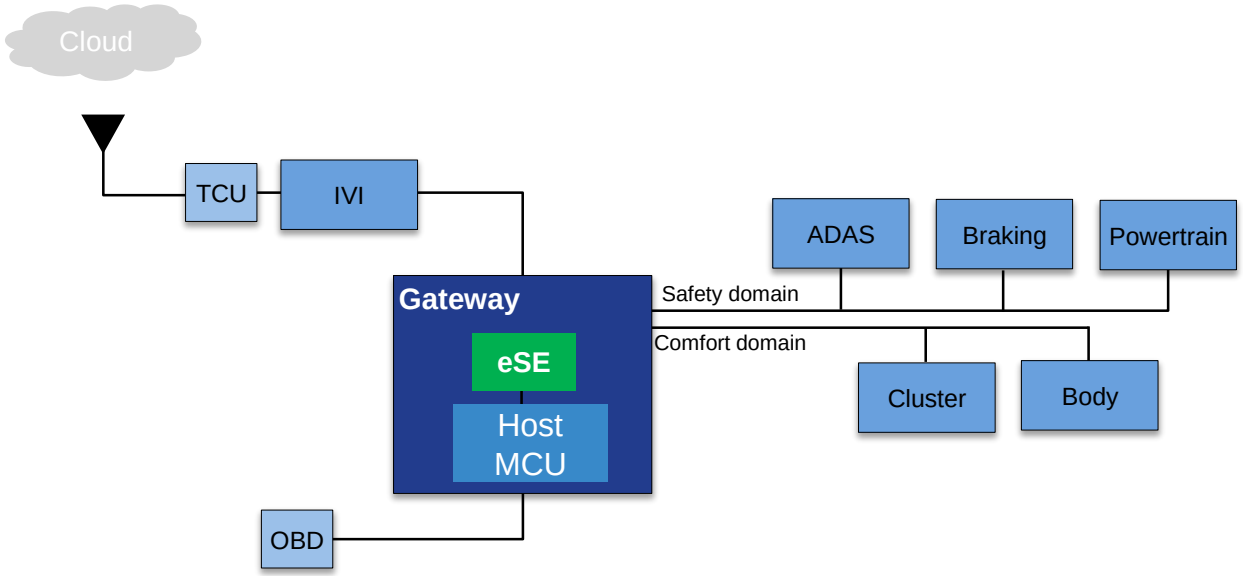

Use Case Overview embedded Secure Element
in Telematics Units, connected Gateways or V2X modules

Securing external interfaces
Connection-oriented communication
Typical Use Cases: Cloud Services:
- OTA FW Update,
- Fleet management,
- Connected Drive Services & Remote Diagnostics/Servicing,
- OEM proprietary web services,
- Payment Services

Securing external interfaces
Ad-hoc communication
Typical Use Cases:
- V2X communication

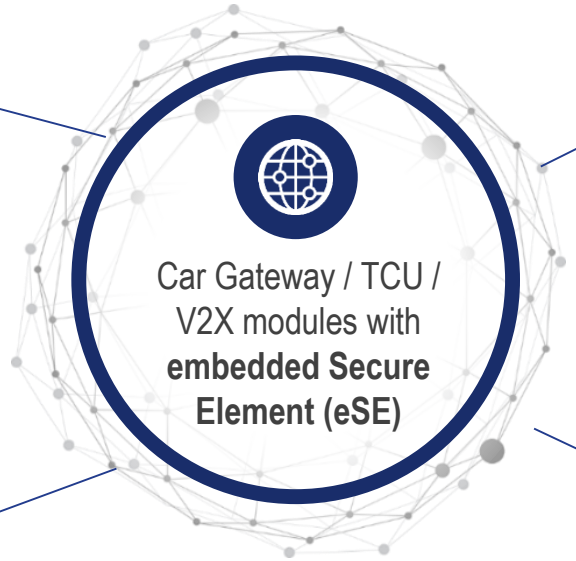

Device/Feature authentication
Centralized Key Mgmt
Typical Use Cases:
- M2M authentication / feature unlocking
- Key Management within IVN
- Key Management of Virtual Car Keys (pairing of smartphones used as car key)

Specific Applications
Potential Use Cases:
- Secure storage of IDS logs
- Secure storage of Vehicle Life Cycle Data (Mileage, Maintenance Status, …)

04.

MCU / MPU

SECURE PROCESSING (MCU/MPU)

- Defined by hardware accelerated Crypto capability
- IP can be applied to any MCU/Processor
  - HW: MCU, AES accelerator, RNG, secure memory
  - SW: APIs incl. public key crypto, Hash
- Use cases:
  - CAN Message authentication
  - Secure boot – FW auth.
  - Key storage
  - Encryption

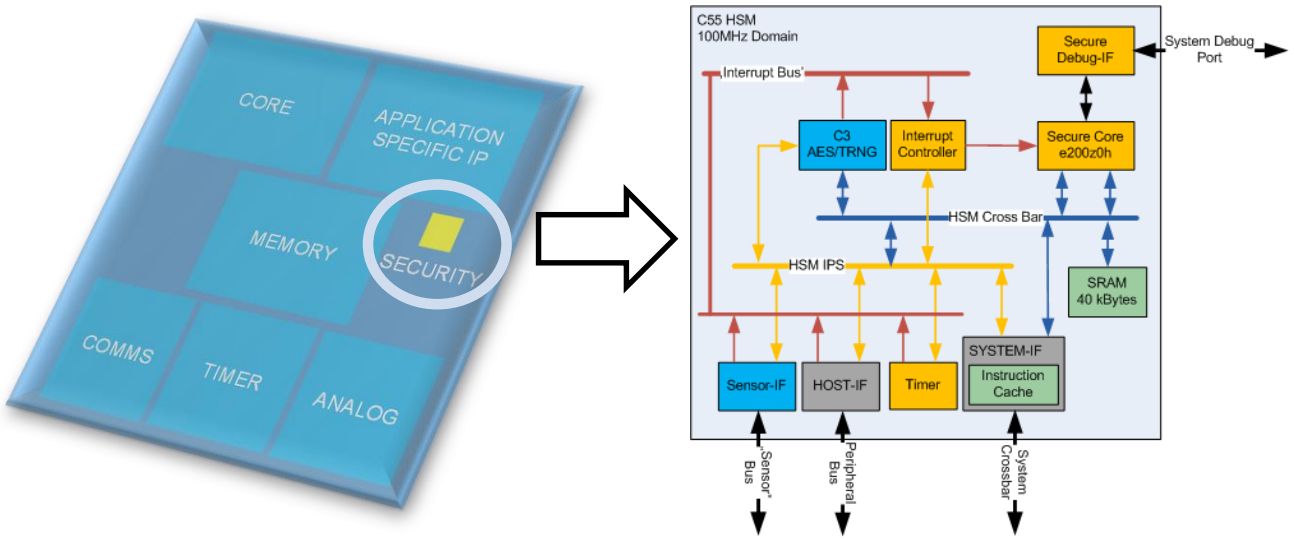

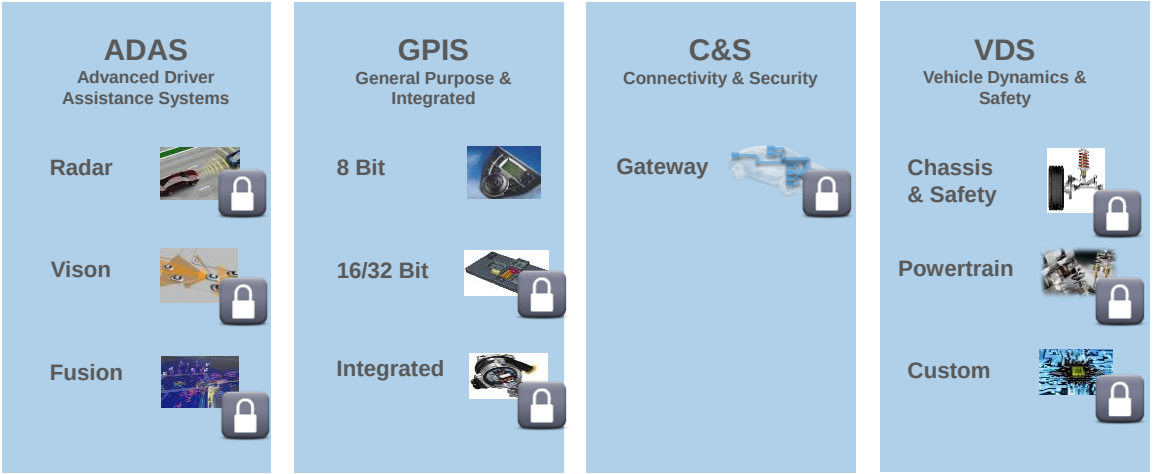

CURRENT SECURITY MODULES

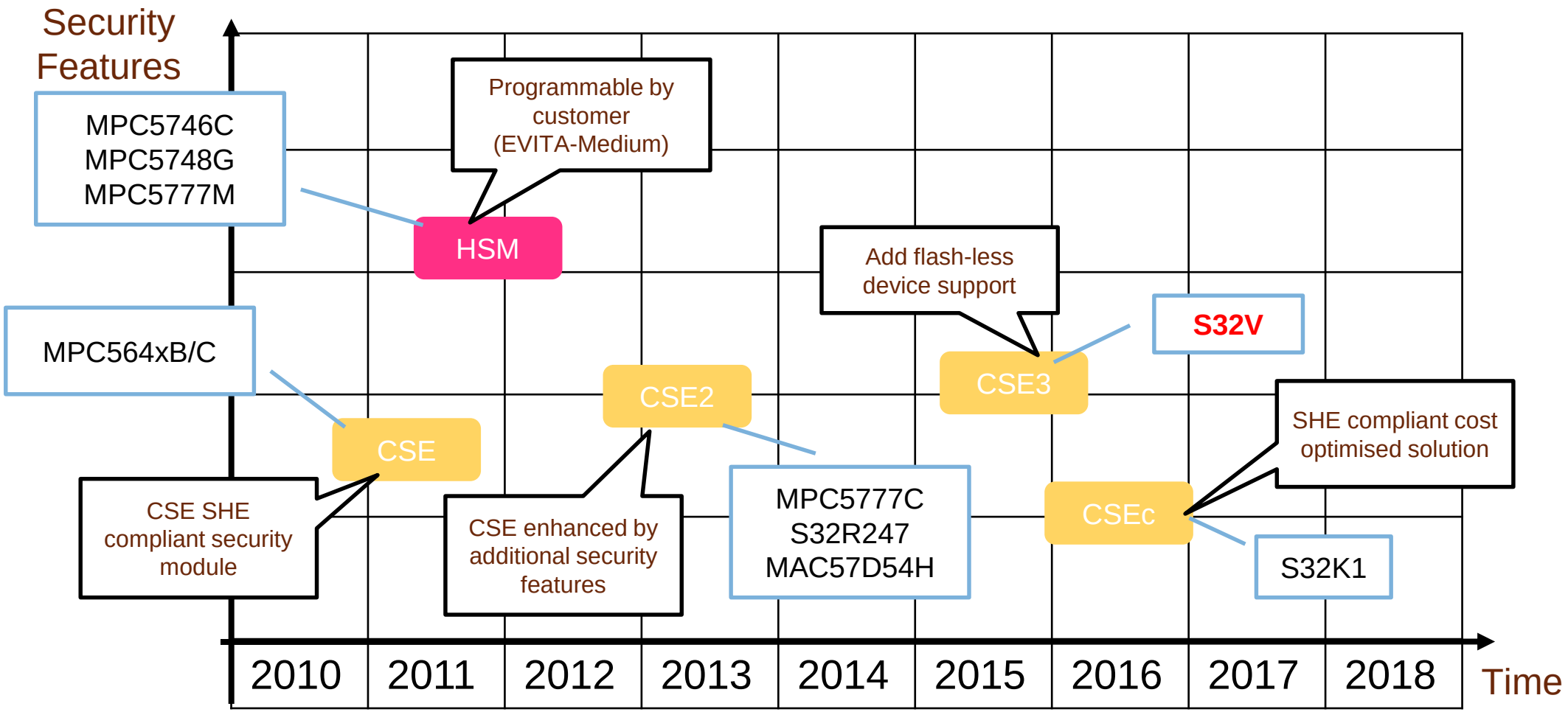

04.

i.MX 6 Security Features

i.MX Trust Architecture Features

Trusted Execution

- Isolates execution of critical SW from possible malware
- TrustZone Secure & Normal Worlds (processor modes)
- Hardware firewalls between CPU & DMA masters and memory & peripherals

High Assurance Boot

- Authenticated boot: prevents unauthorized SW execution
- Encrypted boot: protects SW confidentiality
- Digital signature checks embedded in on-chip boot ROM
- Run every time processor is reset

HW Cryptographic Accelerators

- i.MX family dependent
- Symmetric: AES-128, AES-256, 3DES, ARC4
- Asymmetric: RSA and ECC on some variants
- Message Digest & HMAC: SHA-1, SHA-256, MD-5

i.MX Trust Architecture Features (continued)

Secure Storage

- Protects data confidentiality and integrity
- Off-chip: cryptographic protection including device binding
- On-chip: self-clearing Secure RAM
- HW-only keys: no SW access

HW Random Number Generation

- Ensures strong keys and protects against protocol replay
- On-chip entropy generation
- Cryptographically secure deterministic RNG

Secure Clock

- Provides reliable time source
- On-chip, separately-powered real-time clock
- Protection from SW tampering

i.MX Trust Architecture Features (continued)

Secure Debug:

- Protects against HW debug (JTAG) exploitation for:
  - Security circumvention
  - Reverse engineering
- Three security levels + complete JTAG disable

Tamper Detection

- Protects against run-time tampering
- Monitoring of various alarm sources
  - Debug activation
  - External alarm (e.g. cover seal)
  - SW integrity checks
  - SW alarm flags
- HW and SW tamper response
- Support varies by i.MX family

i.MX Trust Architecture – Overview

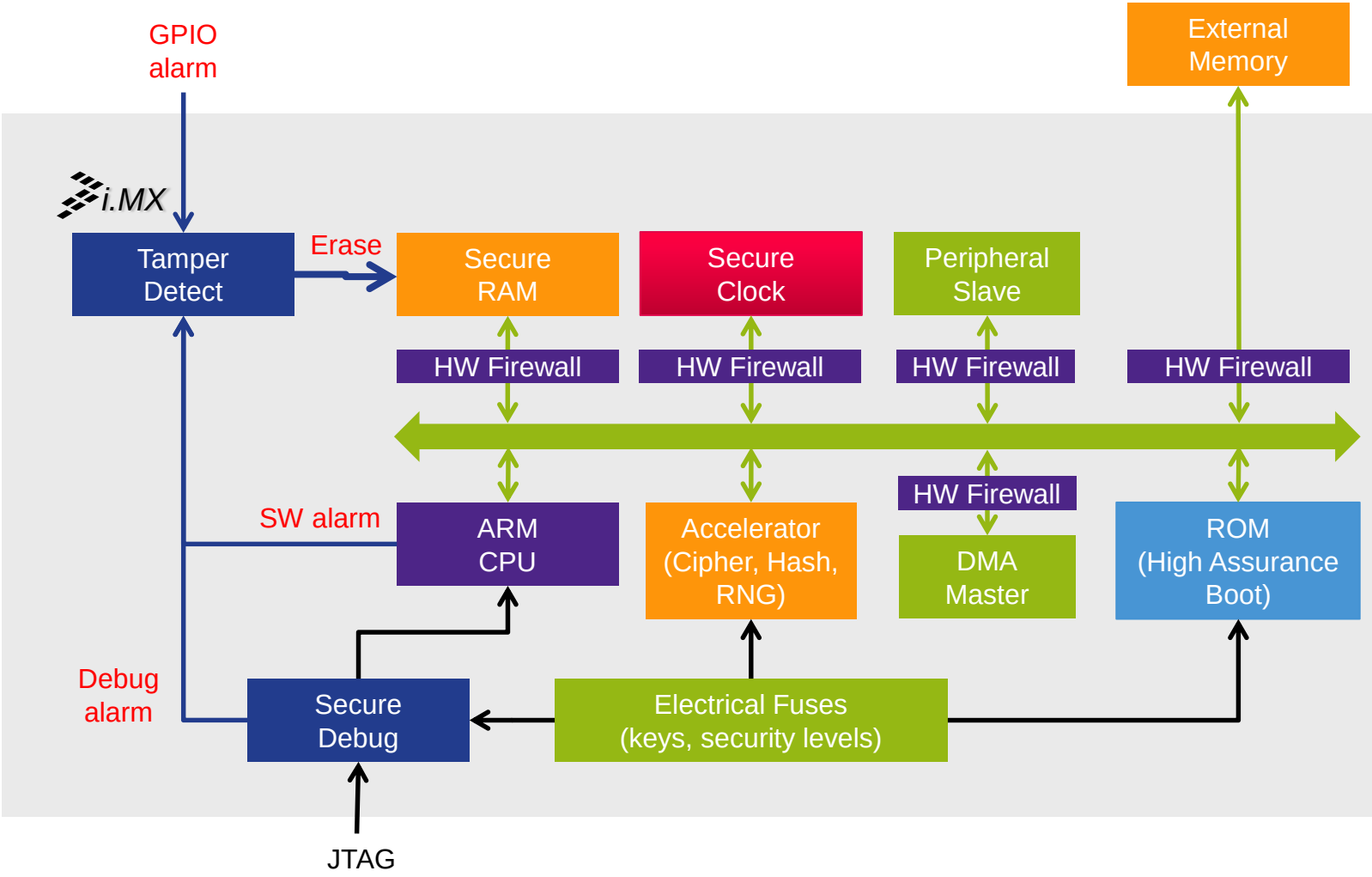

Resource Domain Partitioning Concept

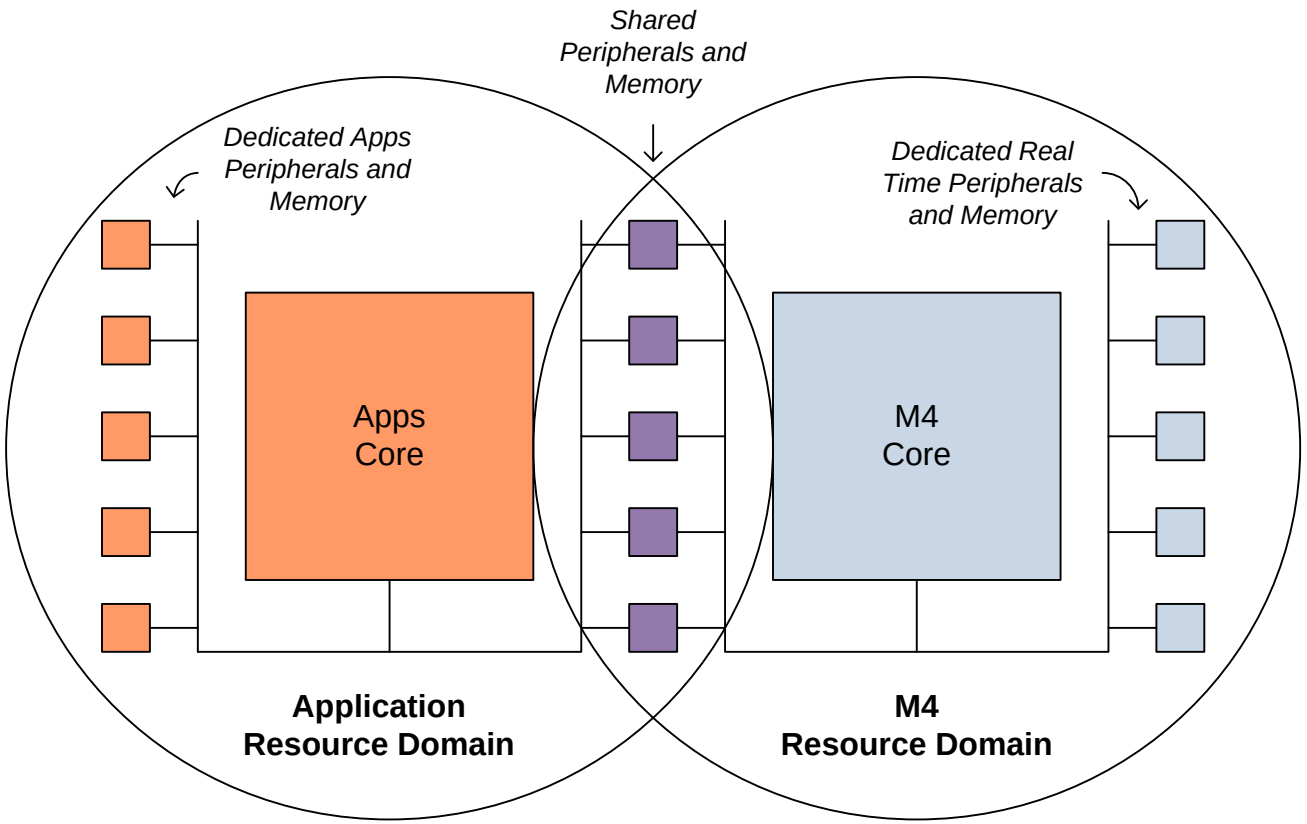

05.

Memory and Peripheral Isolation for TrustZone Support

TEE Software Stack

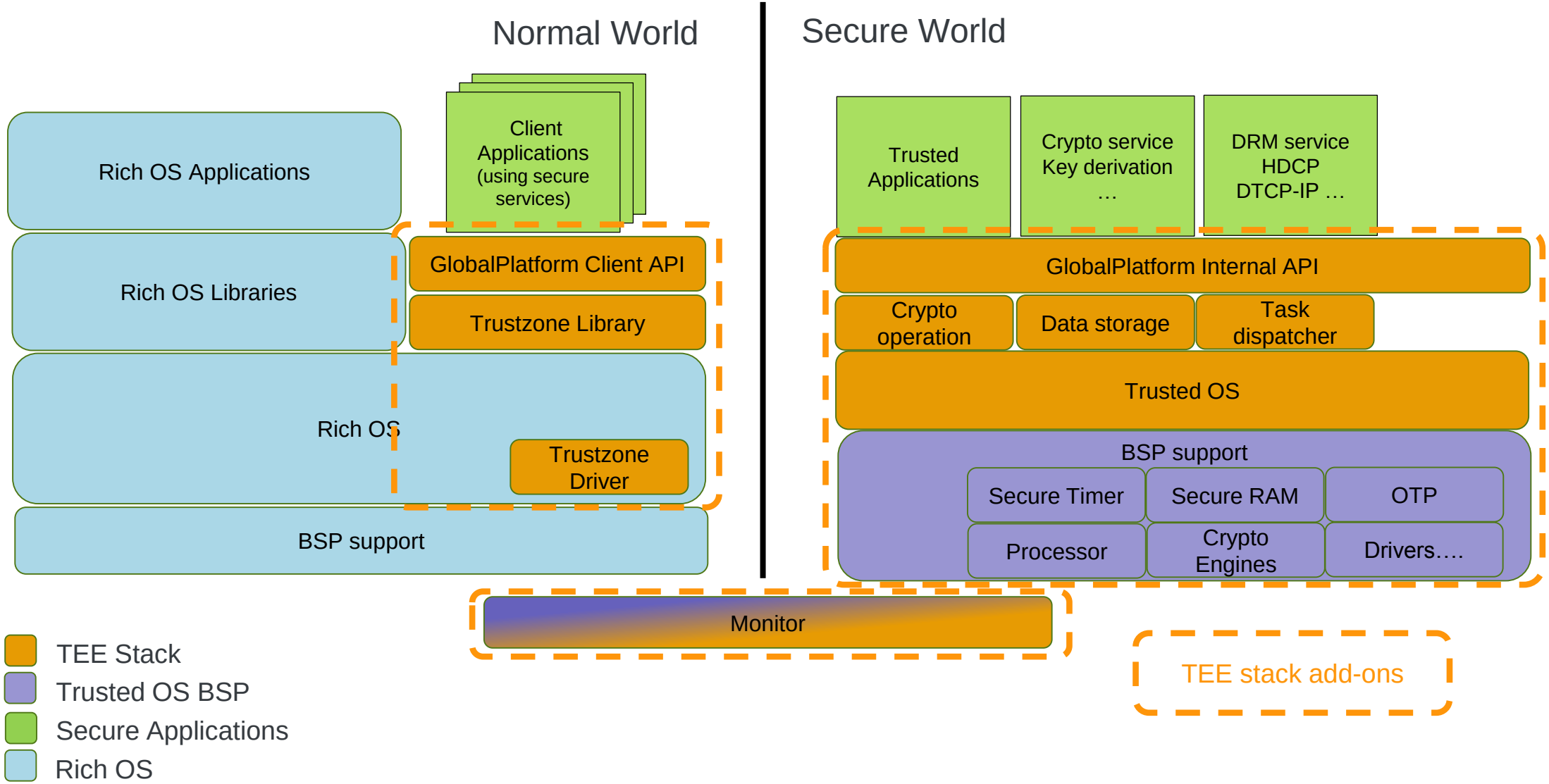

06.

i.MX Security Configuration and Lifecycle

Security configurations

- Fab
  - FSL-internal configuration
  - Security state: all reachable
  - Debug: Full debug possible, security blocks unprotected
  - OTP key: available
  - HAB: failures non-fatal
- Open
  - Shipping configuration (FSL → OEM)
  - Non-secure end-product configuration (OEM → end user)
  - Security state: Non-Secure
  - Debug: configurable, security blocks scan-protected
  - OTP key: unavailable (test key)
  - HAB: failures non-fatal
- Closed
  - Secure end-product configuration (OEM → end user)
  - Security state: Trusted/Secure
  - Debug: configurable, security blocks protected
  - OTP key: available
  - HAB: failsafe policy
- Field Return
  - Field Return configuration (OEM → FSL)
  - Rest as for Open configuration
  - FSL Test modes re-enabled

07.

NXP MCU Security Features

HSM Security Architecture

Features:

- Device life cycle scheme
- Unique ID for each device
- Debugger restrictions
- Flash Protection (TDM & PASS)
  - OTP
  - read / write & erase
  - diary to log erasing-steps

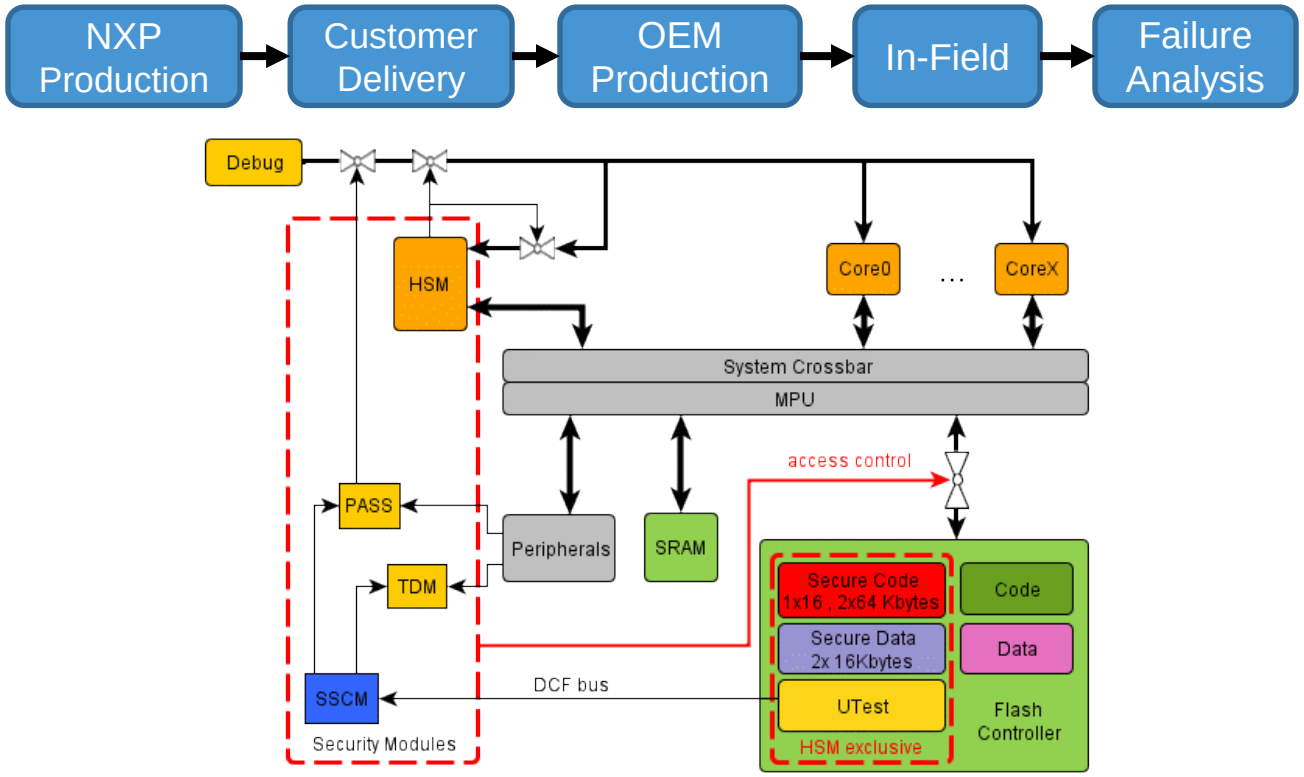

SSCM: System Status Configuration Module
PASS: Password And Device Security Module
TDM: Tamper Detection Module
HSM: Hardware Security Module
MPU: Memory Protection Unit
DCF: Device Configuration Format

Flash Memory Protection

Non volatile flash memory consists of multiple blocks with different purpose and access possibilities:

- Read (location, master, lifecycle)
- Erase (location, master, lifecycle , OTP)
- Write (location, master, lifecycle, OTP)

The Password And Device Security Module (PASS) and the TamperDetectionModule (TDM) handle the access.

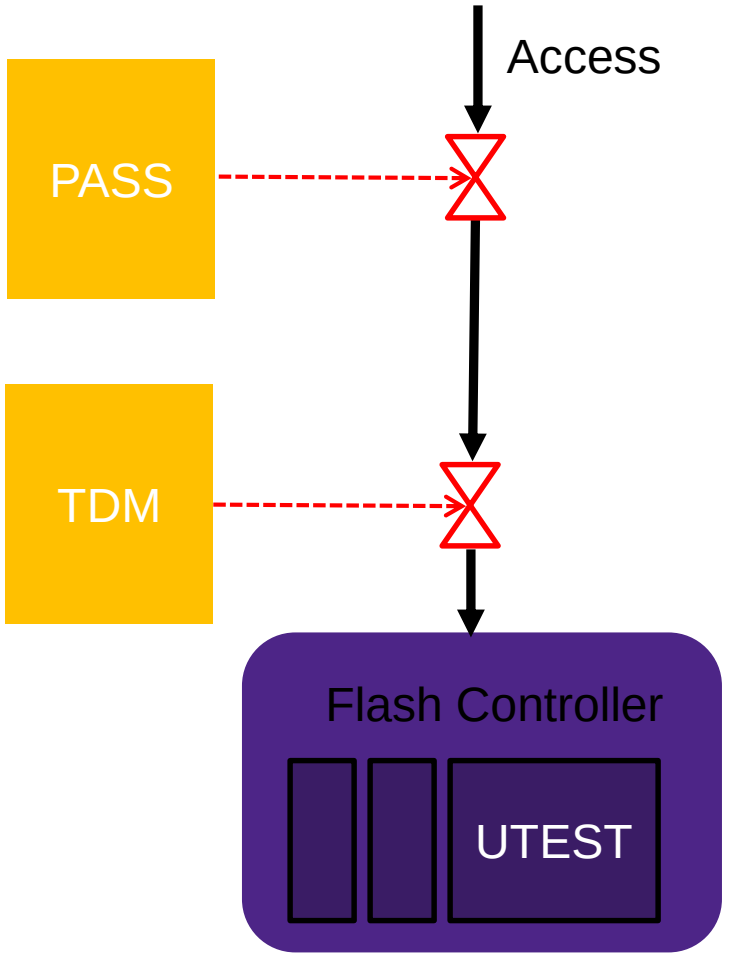

Hardware Security Module (HSM)

v1: MPC5746M / MPC5777M & v2: MPC5748G / MPC5746C

HSM is free programmable by the customer, additional security algorithm could implemented in software

Features:

- e200z0h core (v1: 100MHz / v2: 80 MHz)
- 4Kbytes Instruction cache
- Secure Debugger Interface
- Cryptographic Modules with AES-128, Random Number Generator, DMA
- Sensor Interface – monitor for voltage, temperature and clock (v1)
- Memory
  - SRAM (v1: 40 Kbytes / v2: 32 Kbytes)
  - Flash
    code: 2 x 64 Kbytes + 1 x 16KBytes
    data : 2 x 16 Kbytes

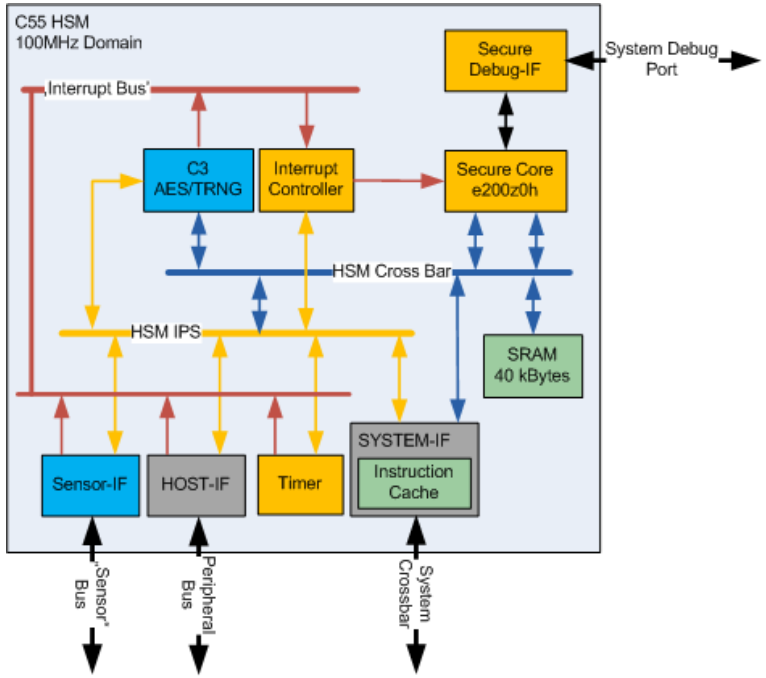

juergen.frank@nxp.com

SHE Firmware

- Release 1.0 is available for MPC574xG (3M & 6M)
- Firmware implements the CSE2 feature set
  (SHE firmware + Global-B requirements) on the HSM
- Firmware „emulates“ the CSE register interface, to simplify porting of existing SW stacks (e.g. Elektrobit)
- Firmware is delivered pre-programed in the device
  - No SHE firmware programming and DCF configuration required by customer

08.

Gateway PLATFORM

WHAT IS A GATEWAY?

- **Gateway is THE central node in the vehicle architecture**
  - Connects all the vehicle domains across all the interfaces (Ethernet, CAN FD, LIN)
  - Provides network isolation and security between functional domains and networks
  - Includes hardware accelerated crypto capability (HSM/CSE)
  - Transmits message to ECU on destination domain (adding secure signature to message)

- **~20% adoption in vehicle architecture today, moving to ~50% by 2020**
  - NXP will be #1 in this market by 2018

Vehicle Architecture (Simplified)

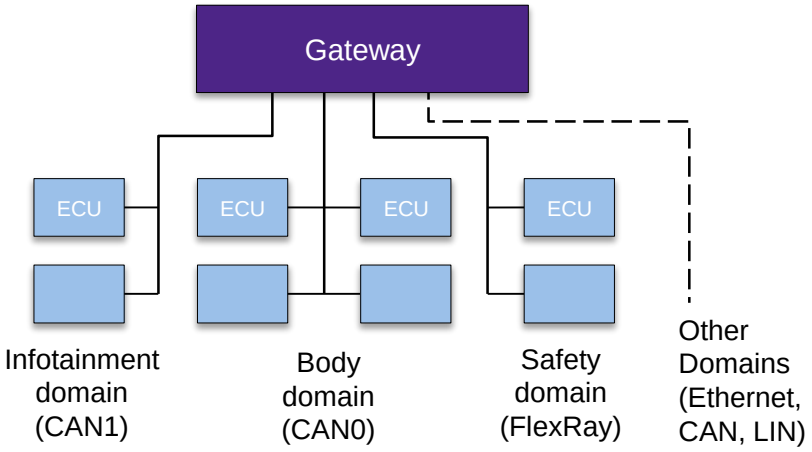

Gateway Function

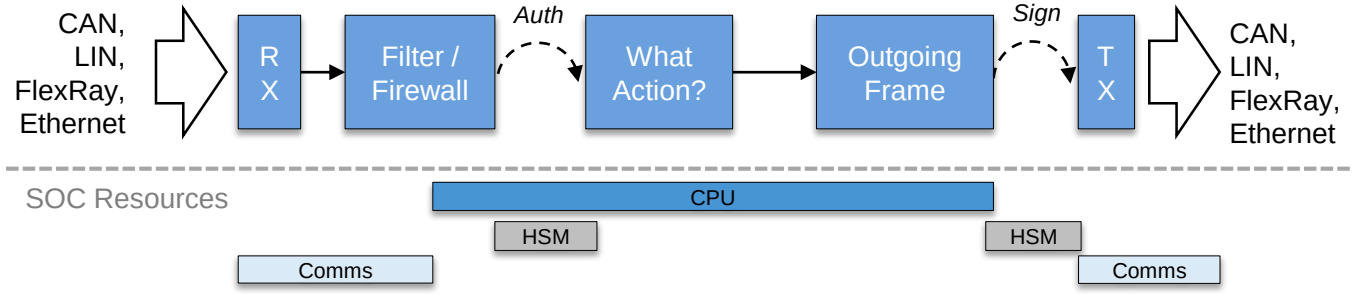

UC: FIREWALL

THE TESLA 'MODEL S' HACK

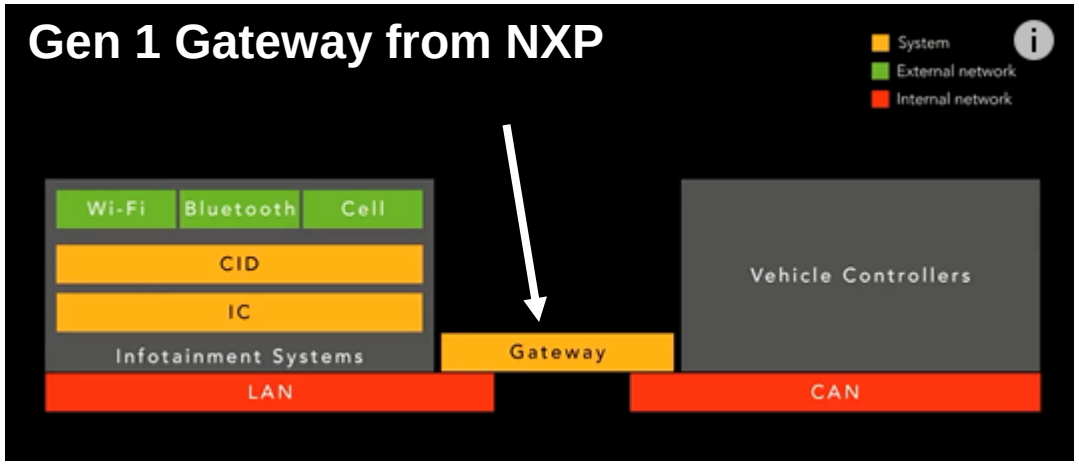

"We believe that the Tesla Model S is an archetype for what all cars will look like in the future – others will follow"

Marc Rogers

CLOUDFLARE

What every car company should do:

1. OTA Update process
   - Without customers having to subscribe to separate data service
2. Isolation of vehicle and infotainment systems
   - Have a "gateway"
   - Spend a lot of effort securing the "gateway"
3. Harden each component individually
   - Assume infotainment is compromised

M. Rogers

SECURE CONNECTIONS
FOR A SMARTER WORLD