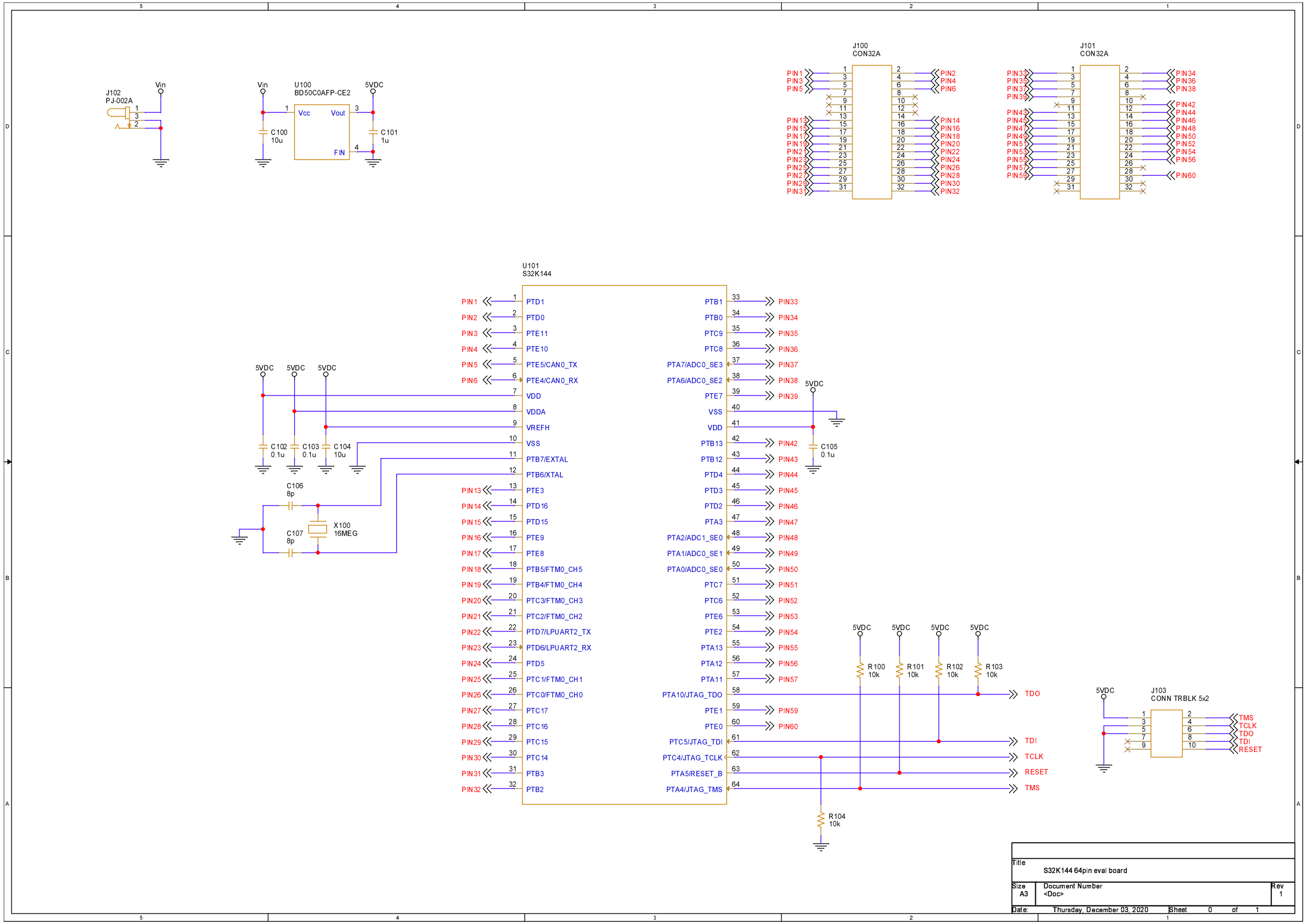
J102
PJ-002A
Vin
U100
BD50C0AFP-CE2
Vcc
Vout
FIN
5VDC
C100
10u
C101
1u
J100
CON32A
J101
CON32A
U101
S32K144
PTD1
PTD0
PTE11
PTE10
PTE5/CAN0_TX
PTE4/CAN0_RX
VDD
VDDA
VREFH
VSS
PTB7/EXTAL
PTB6/XTAL
PTE3
PTD16
PTD15
PTE9
PTE8
PTB5/FTM0_CH5
PTB4/FTM0_CH4
PTC3/FTM0_CH3
PTC2/FTM0_CH2
PTD7/LPUART2_TX
PTD6/LPUART2_RX
PTD5
PTC1/FTM0_CH1
PTC0/FTM0_CH0
PTC17
PTC16
PTC15
PTC14
PTB3
PTB2
PTB1
PTB0
PTC9
PTC8
PTA7/ADC0_SE3
PTA6/ADC0_SE2
PTE7
VSS
VDD
PTB13
PTB12
PTD4
PTD3
PTD2
PTA3
PTA2/ADC1_SE0
PTA1/ADC0_SE1
PTA0/ADC0_SE0
PTC7
PTC6
PTE6
PTE2
PTA13
PTA12
PTA11
PTA10/JTAG_TDO
PTE1
PTE0
PTC5/JTAG_TDI
PTC4/JTAG_TCLK
PTA5/RESET_B
PTA4/JTAG_TMS
C102
0.1u
C103
0.1u
C104
10u
C105
0.1u
C106
8p
C107
8p
X100
16MEG
R100
10k
R101
10k
R102
10k
R103
10k
R104
10k
TDO
TDI
TCLK
RESET
TMS
J103
CONN TRBLK 5x2
Title
S32K144 64pin eval board
Size
A3
Document Number
<Doc>
Rev
1
Date:
Thursday, December 03, 2020
Sheet
0
of
1