PMIC Section

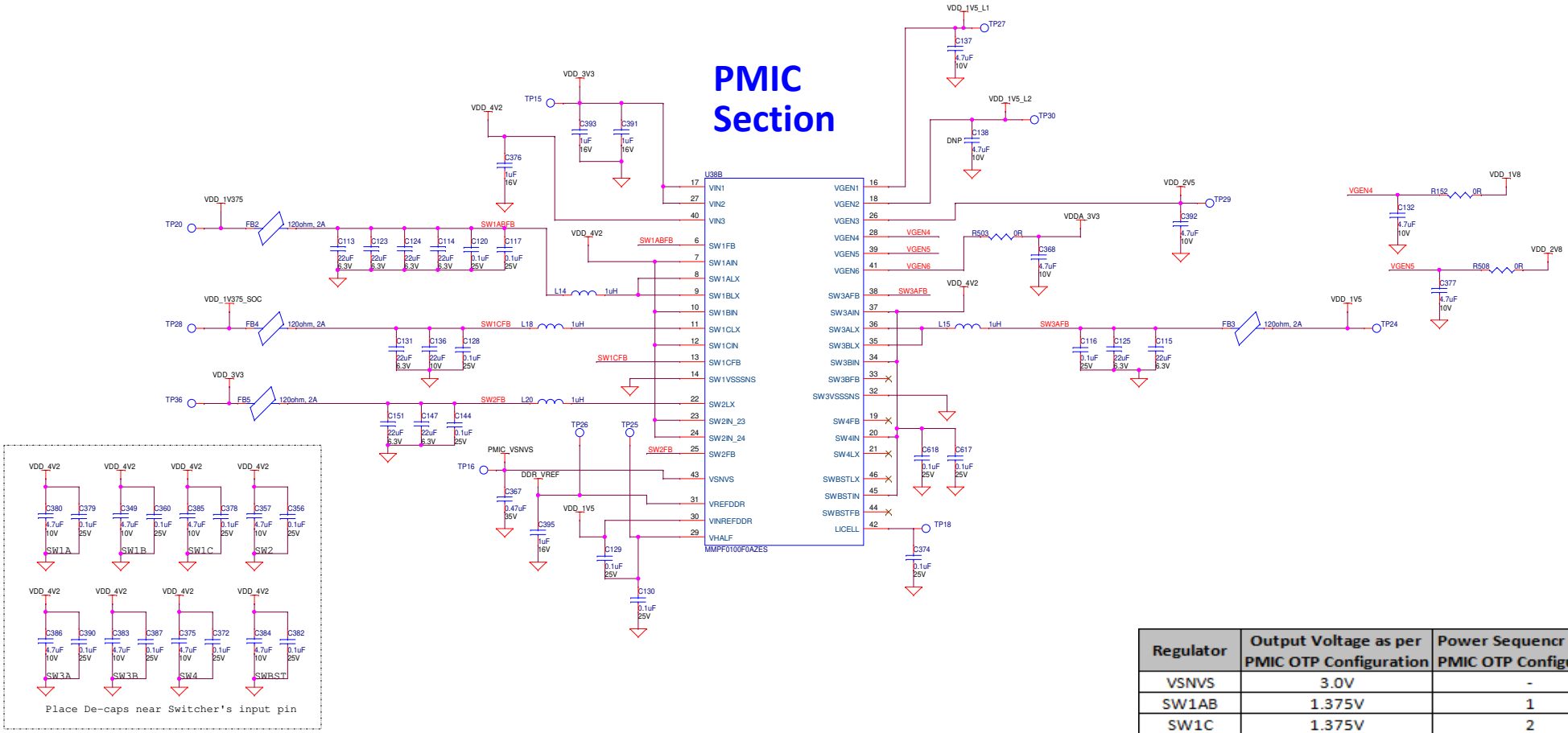

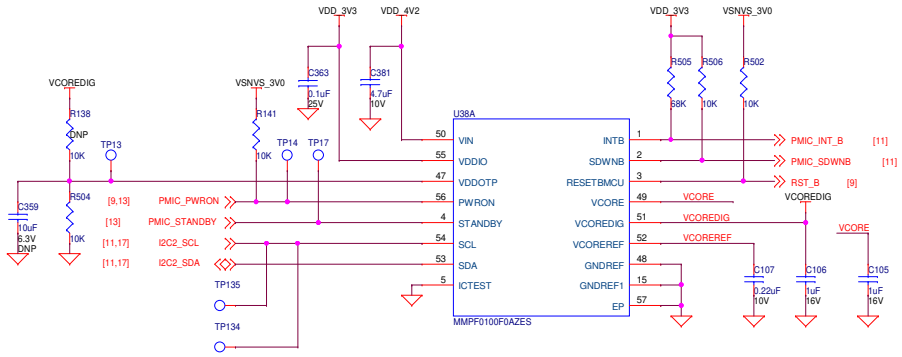

Regulator	Output Voltage as per PMIC OTP Configuration	Power Sequencr as per PMIC OTP Configuration
VSNVS	3.0V	-
SW1AB	1.375V	1
SW1C	1.375V	2
SW2	3.3V	5
SW3A	1.5V	3
SW3B	1.5V	3
SW4	3.15 V	6
SWBST	5V	13
VGEN1	1.5V	9
VGEN2	1.5V	10
VGEN3	2.5V	11
VGEN4	1.8V	7
VGEN5	2.8V	12
VGEN6	3.3V	8
VREFDDR		3