Synchronizing Industrial Networks with 802.1AS

Jeff Steinheider
Director, Product Marketing Industrial Applications Processors

MARCH 2020

SECURE CONNECTIONS
FOR A SMARTER WORLD

EXTERNAL

EMBEDDED TIME-SENSITIVE NETWORKING (TSN)

- Converge OT and IT traffic in a single network
- Determinist Ethernet at gigabit speeds
- Reduce network delays, improve robustness
- Embedded in multi-processor and crossover SoCs

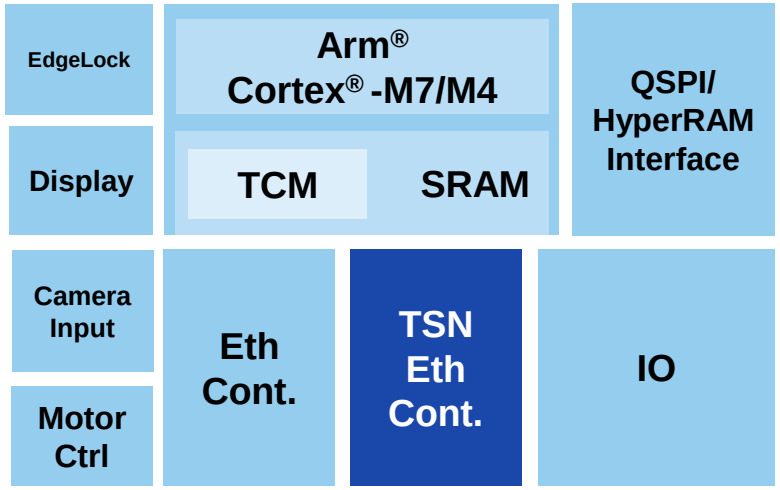

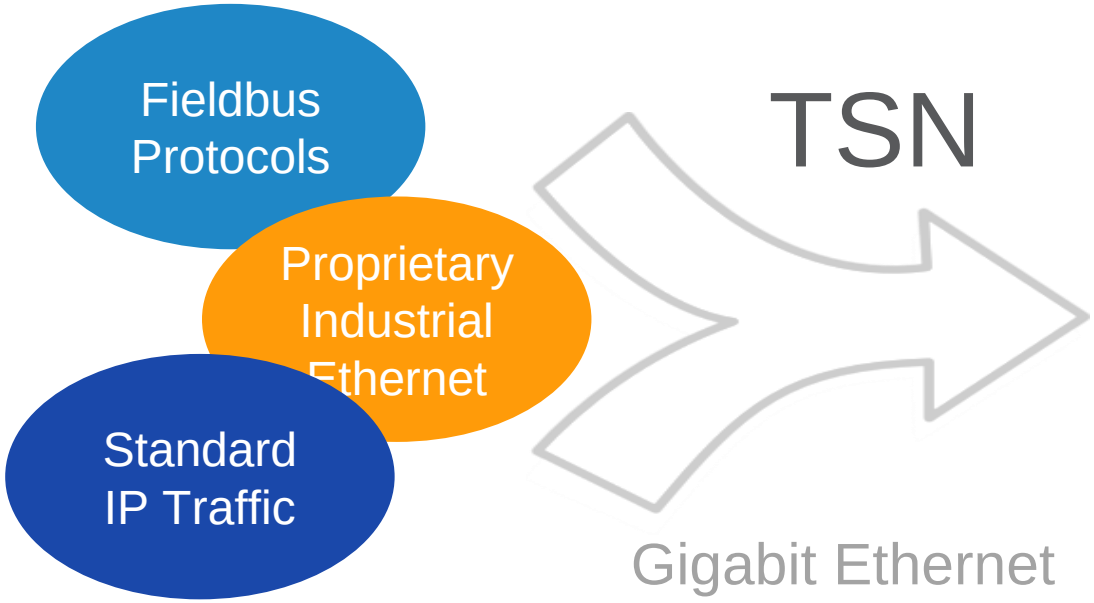

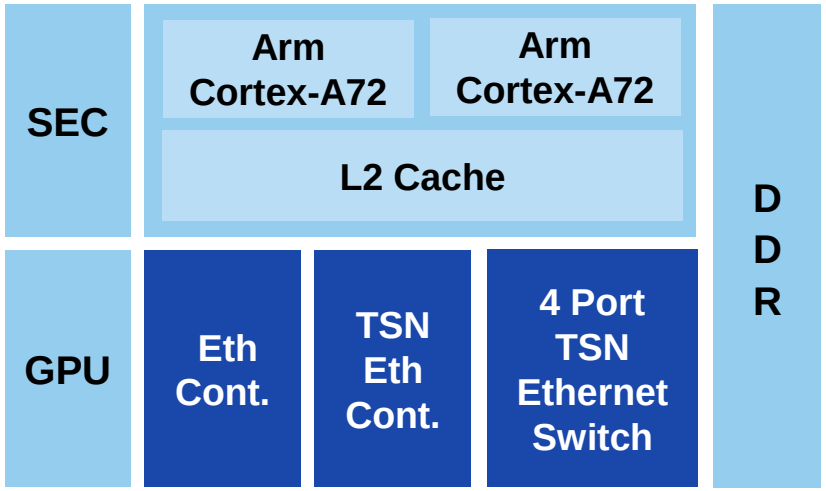

TSN STANDARDS FOR INDUSTRY

Standard	Description
802.1Qbv	Scheduled Traffic
802.1Qav	Forwarding and Queuing Enhancements
802.1Qbu, 802.3BR	Frame Preemption
802.1CB	Frame Replication and Elimination for Reliability
802.1Qci	Per-stream Filtering and Policing
802.1AS	Timing and Synchronization for Time-Sensitive Applications

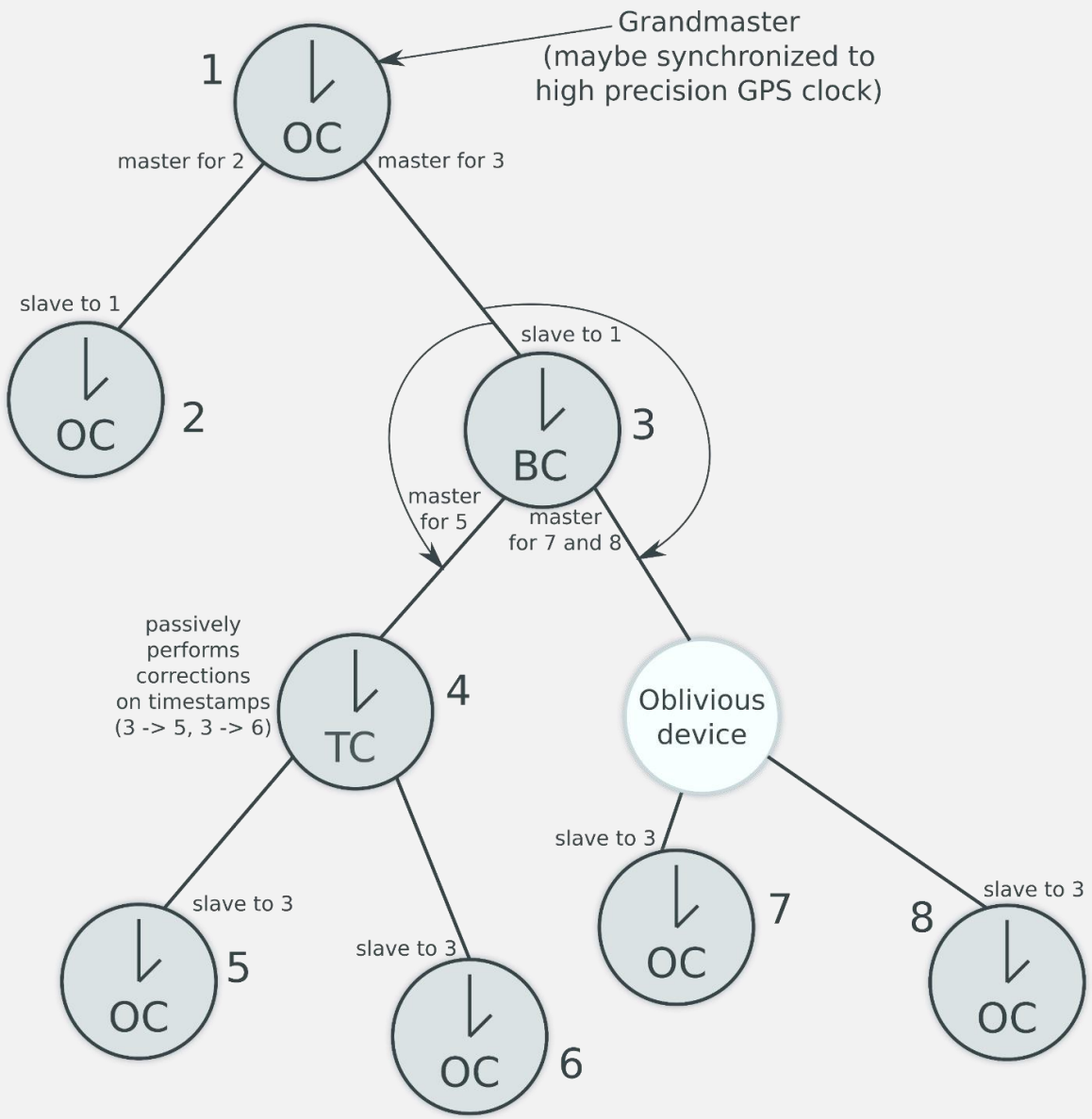

PRECISION TIME PROTOCOL (IEEE 1588)

- Clock distribution tree in an L2 network
- Point to point: if one link partner is master, the other(s) are slave
- Slave synchronizes its PTP Hardware Clock (PHC) to the master
- Ordinary Clock (OC), Boundary Clock (BC), Transparent Clock (TC)
- The basis of all other TSN protocols
- Has a quite broad specification - there also exist tighter “profiles” of it

DIFFERENCES BETWEEN PTP (1588-2008) AND GPTP (802.1AS-2011)

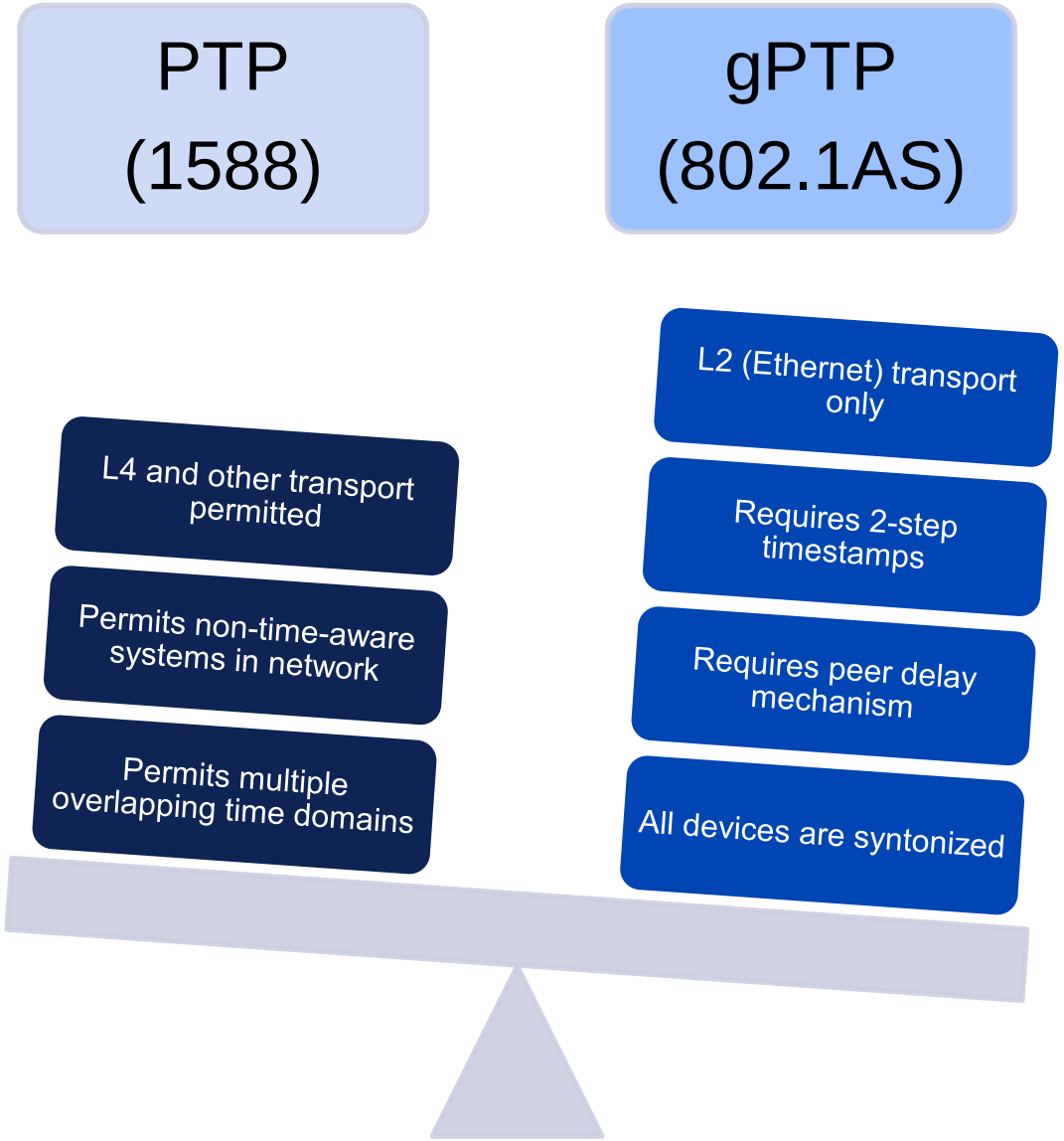

TERMINOLOGY

PTP (1588)	gPTP (802.1AS)
Ordinary clocks	End stations
Boundary clocks	Bridges
P2P transparent clocks	
End-to-end transparent clocks	-

WHY DO WE NEED SYNCHRONIZATION?

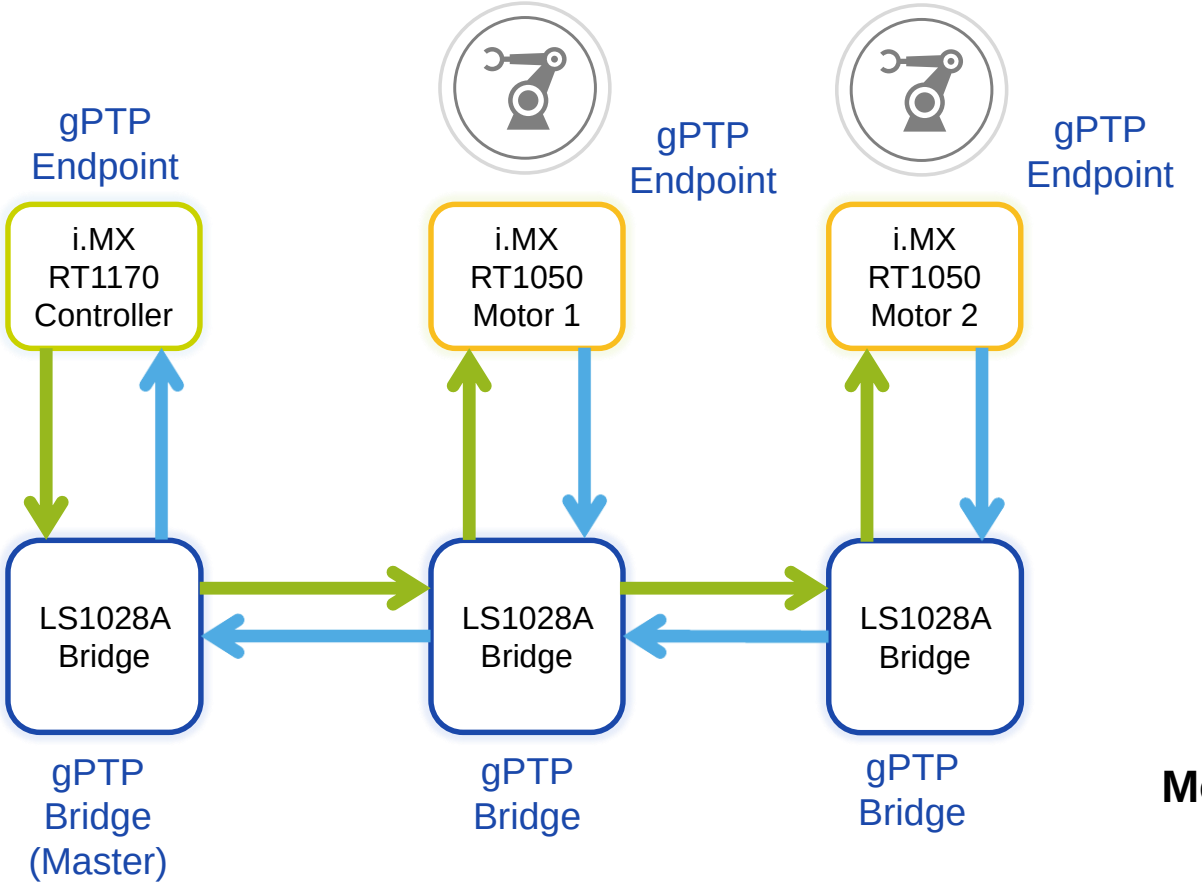

Controller command

Motor feedback

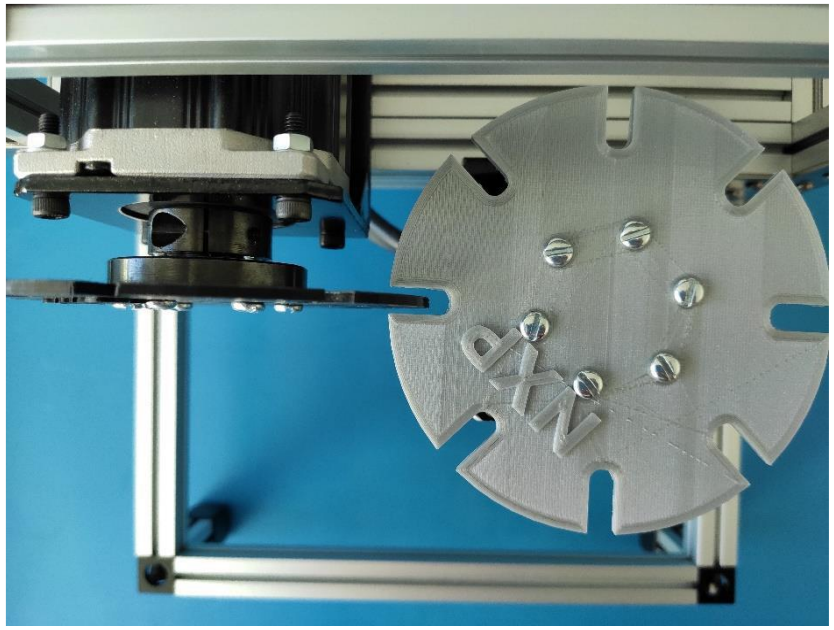

Motor 2

Motor 1

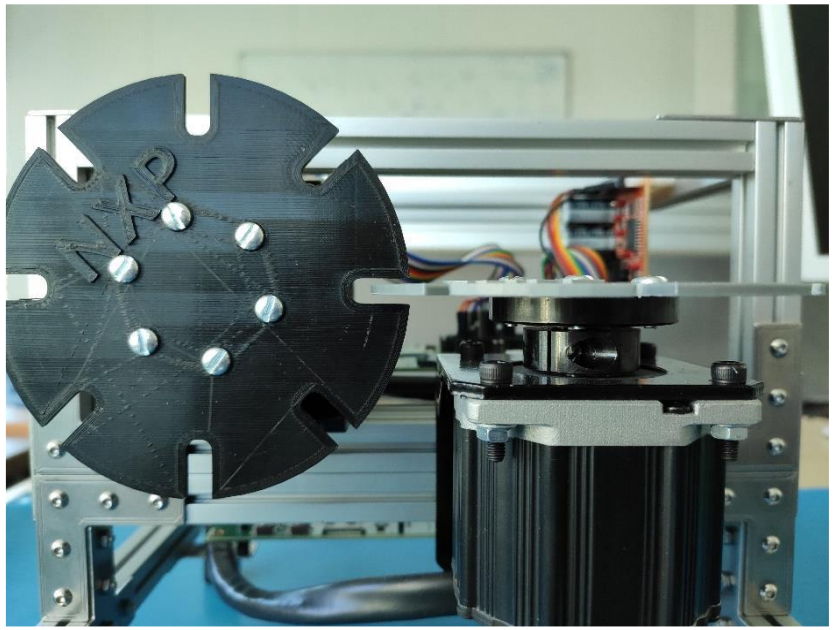

LAYERSCAPE LS1028A – INDUSTRY READY

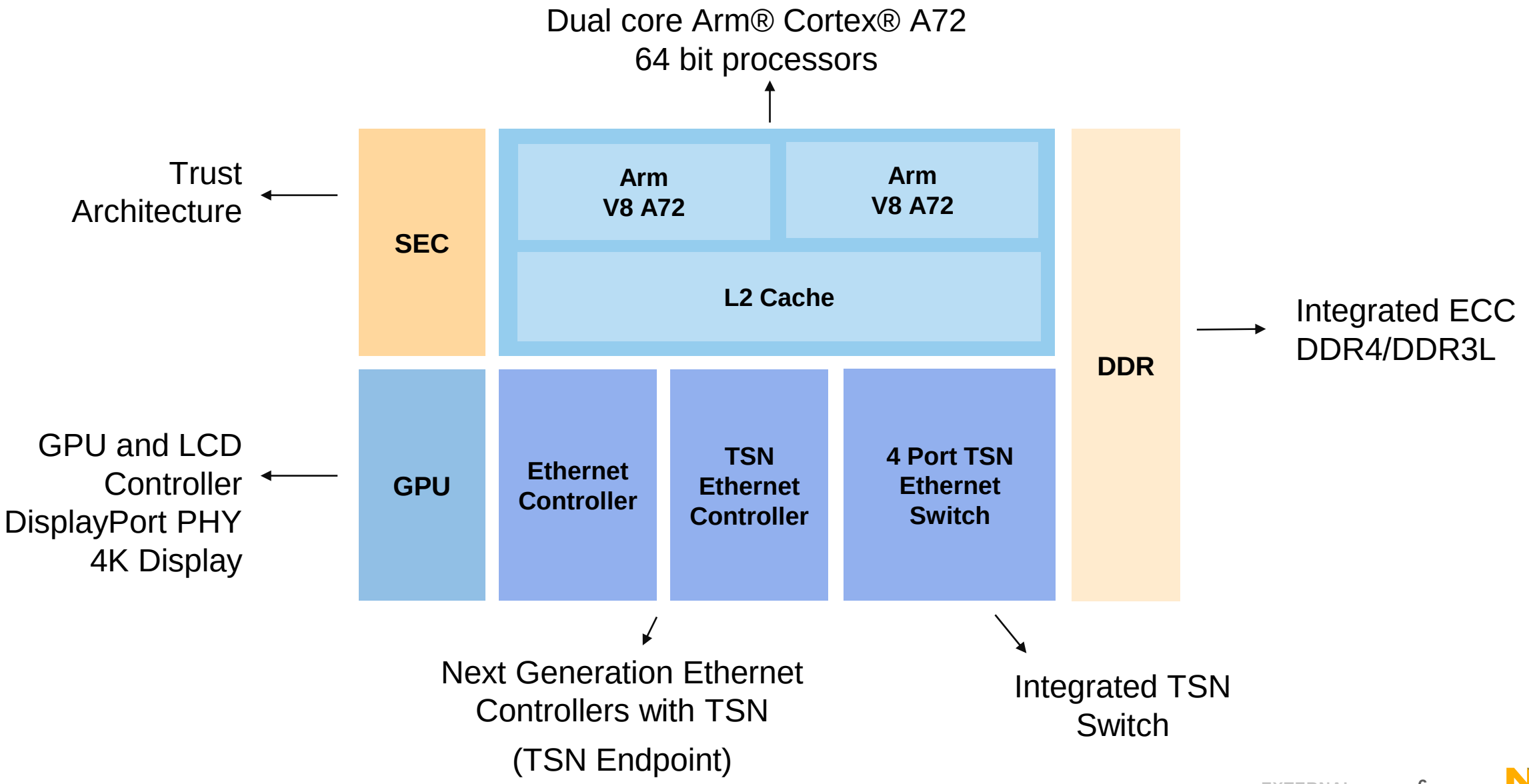

i.MX RT1170 CROSSOVER PROCESSOR – INDUSTRY READY

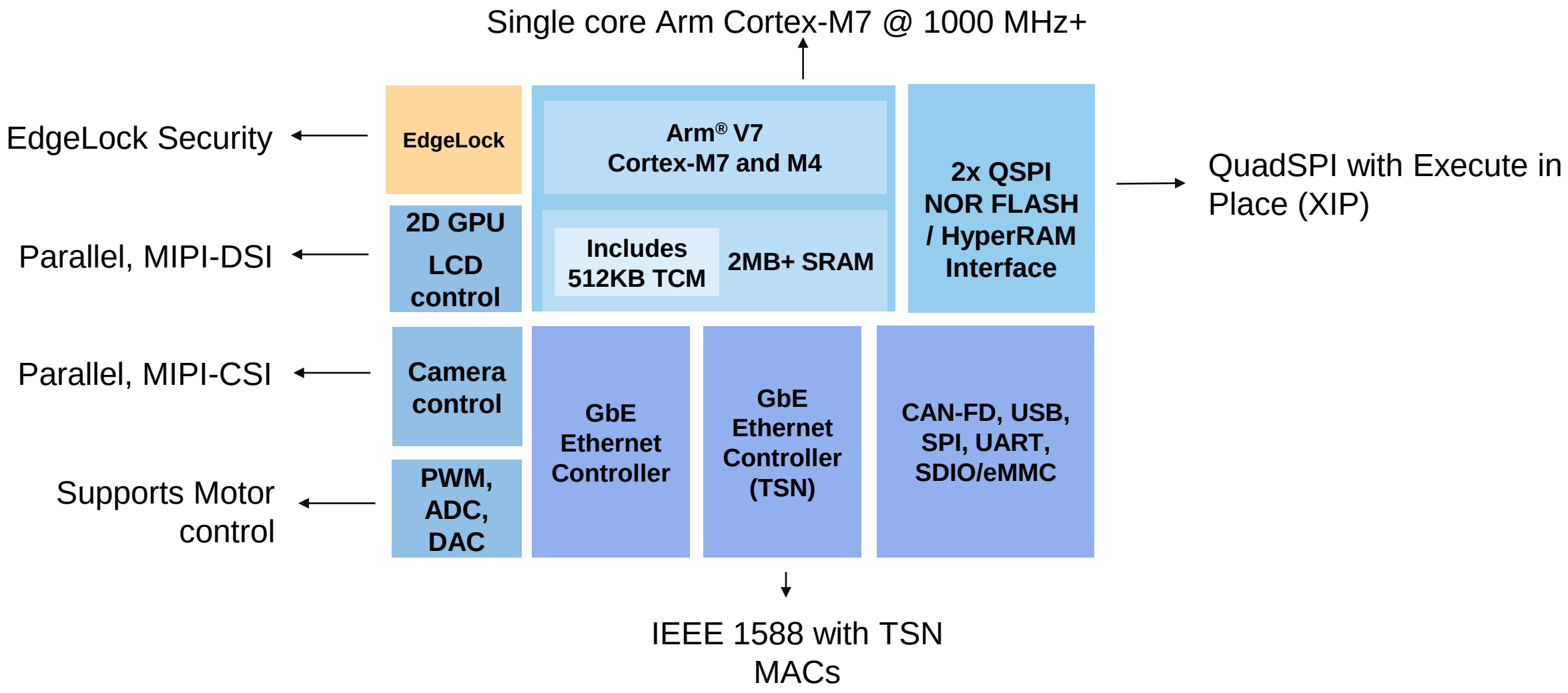

OPENIL

OPEN INDUSTRIAL LINUX

OpenIL.org

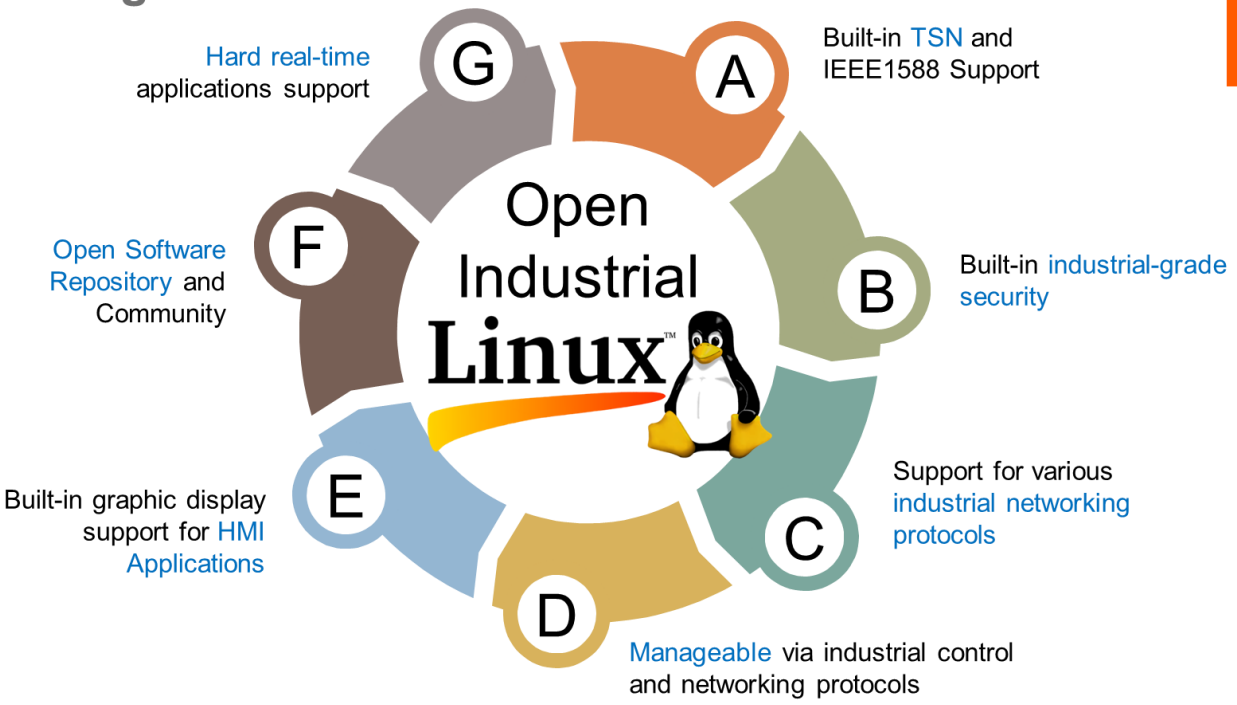

LS1028A

- Deterministic Computing
  - Xenomai Linux
  - Bare Metal Framework
- Open Source support for TSN
- Open source support for timing synchronization (PTP, gPTP)

1588/PTP CLOCK CIRCUITS AVAILABLE IN LAYERSCAPE SOCS

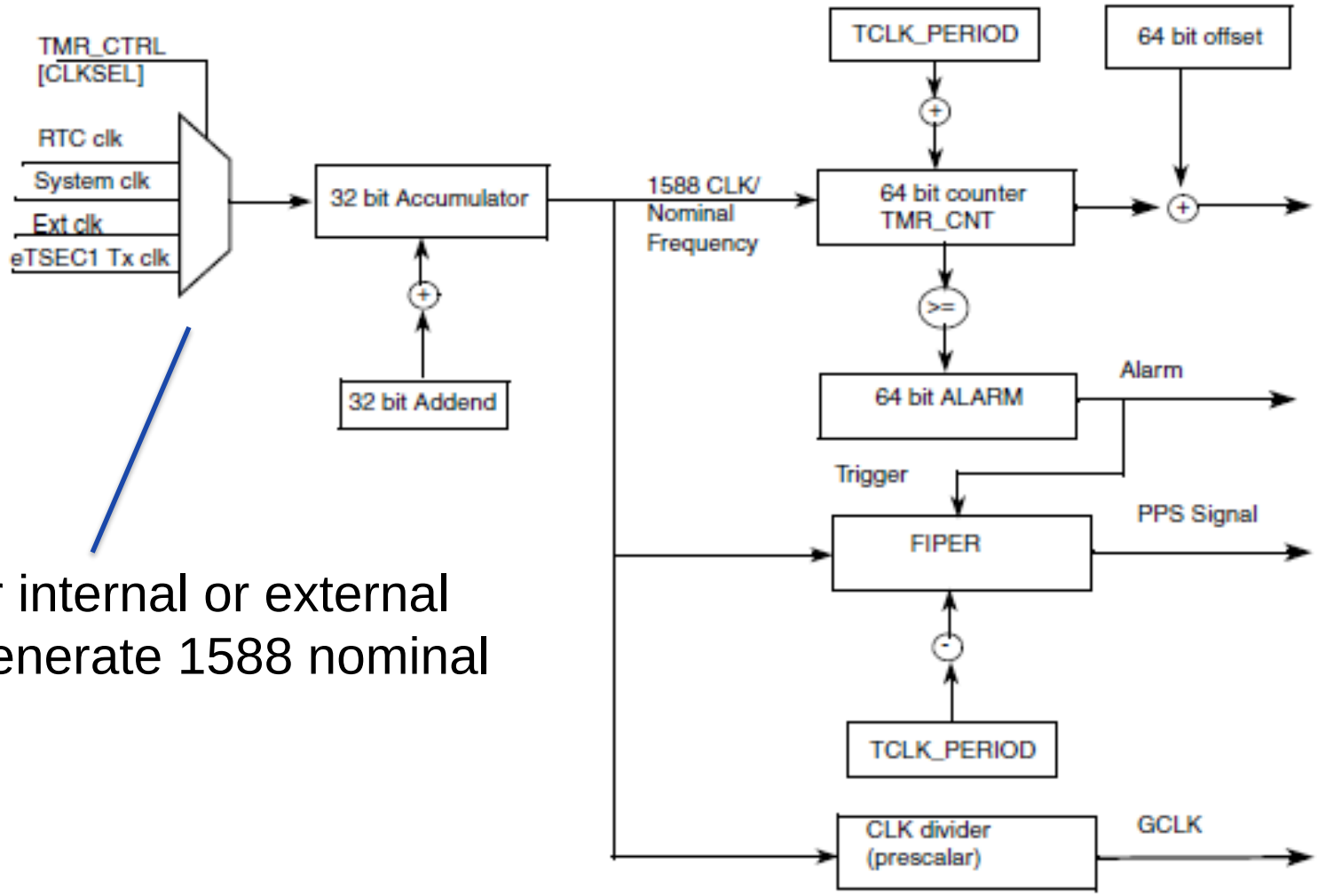

Timestamping value used for Tx and Rx packets

Generate phase aligned periodic pulses

Use either internal or external clock to generate 1588 nominal frequency

ENETC - PRECISION TIME PROTOCOL (IEEE 1588/802.1AS)

- The driver supports primitives for the following operations in a manner compliant to the Linux kernel API for PTP:
  - Steering the PTP Hardware Clock: clock stepping and frequency adjustments
  - Timestamping PTP frames on reception and transmission
- Compatibility with the 1588 protocol and its various profiles is handled by the application stack (linuxptp)
- There is also ancillary circuitry which facilitates the use of LS1028 as a grandmaster device
  - PPS input may be used for high-precision synchronization to a GPS module

PTP4L GPTP SYNCHRONIZATION PERFORMANCE

Offset from Master, Startup

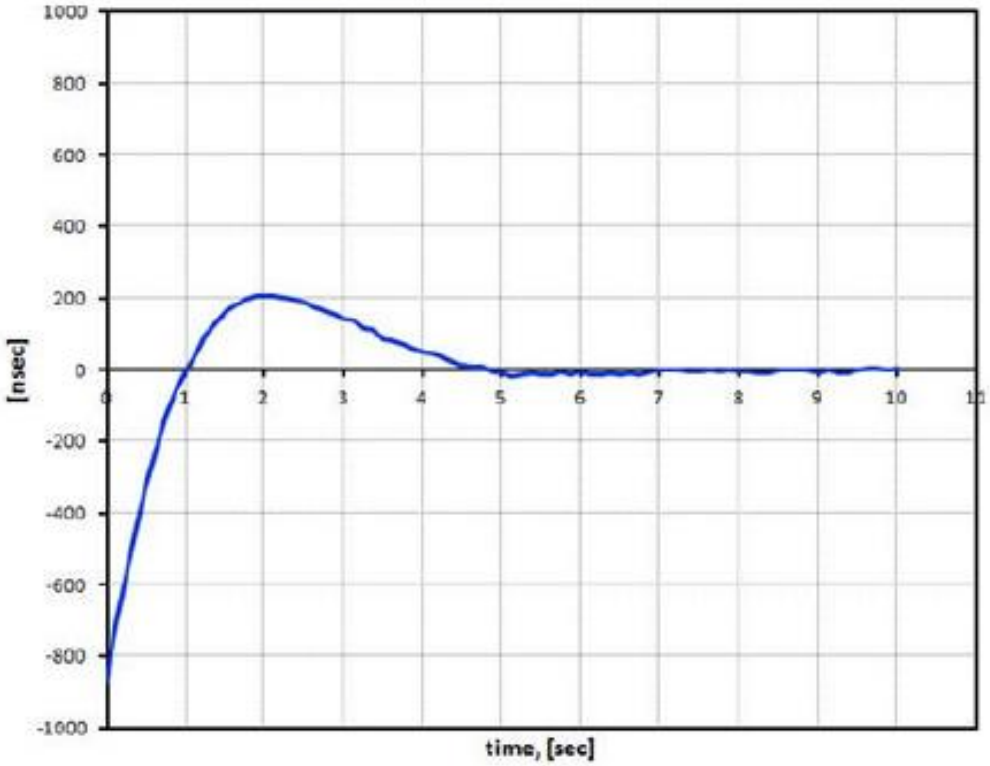

Timing settles within 5 seconds

Offset from Master, Stable State

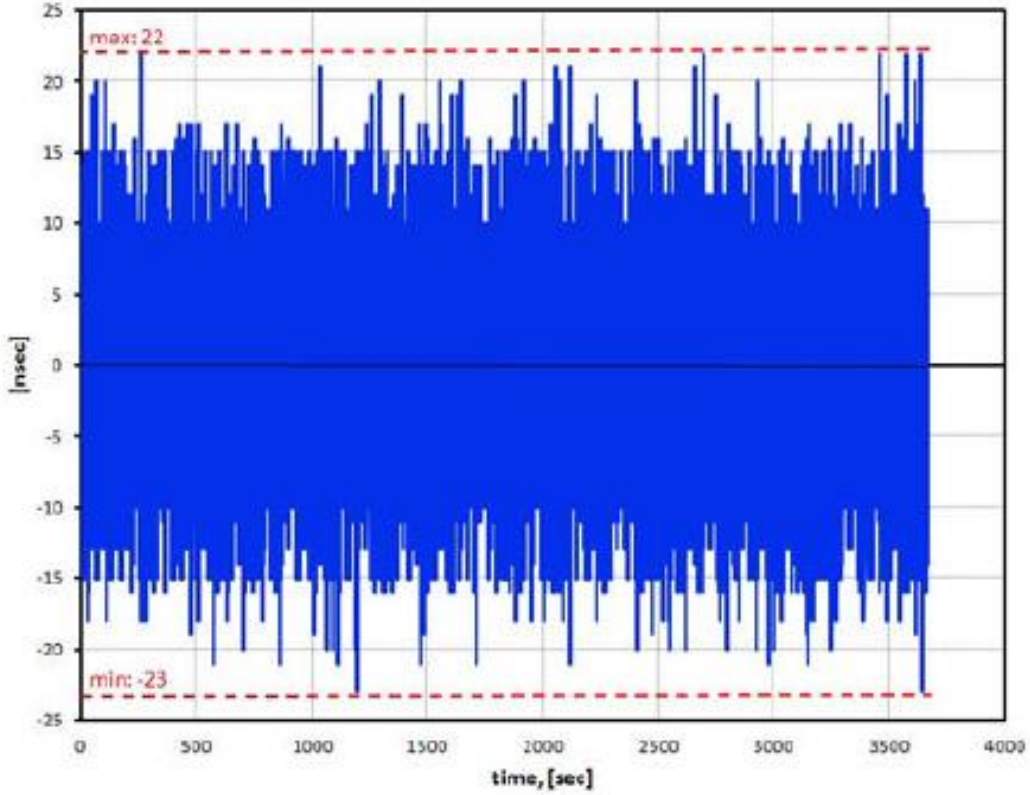

Accuracy within ±23 nsec

NXP AVB COMMERCIAL SOFTWARE

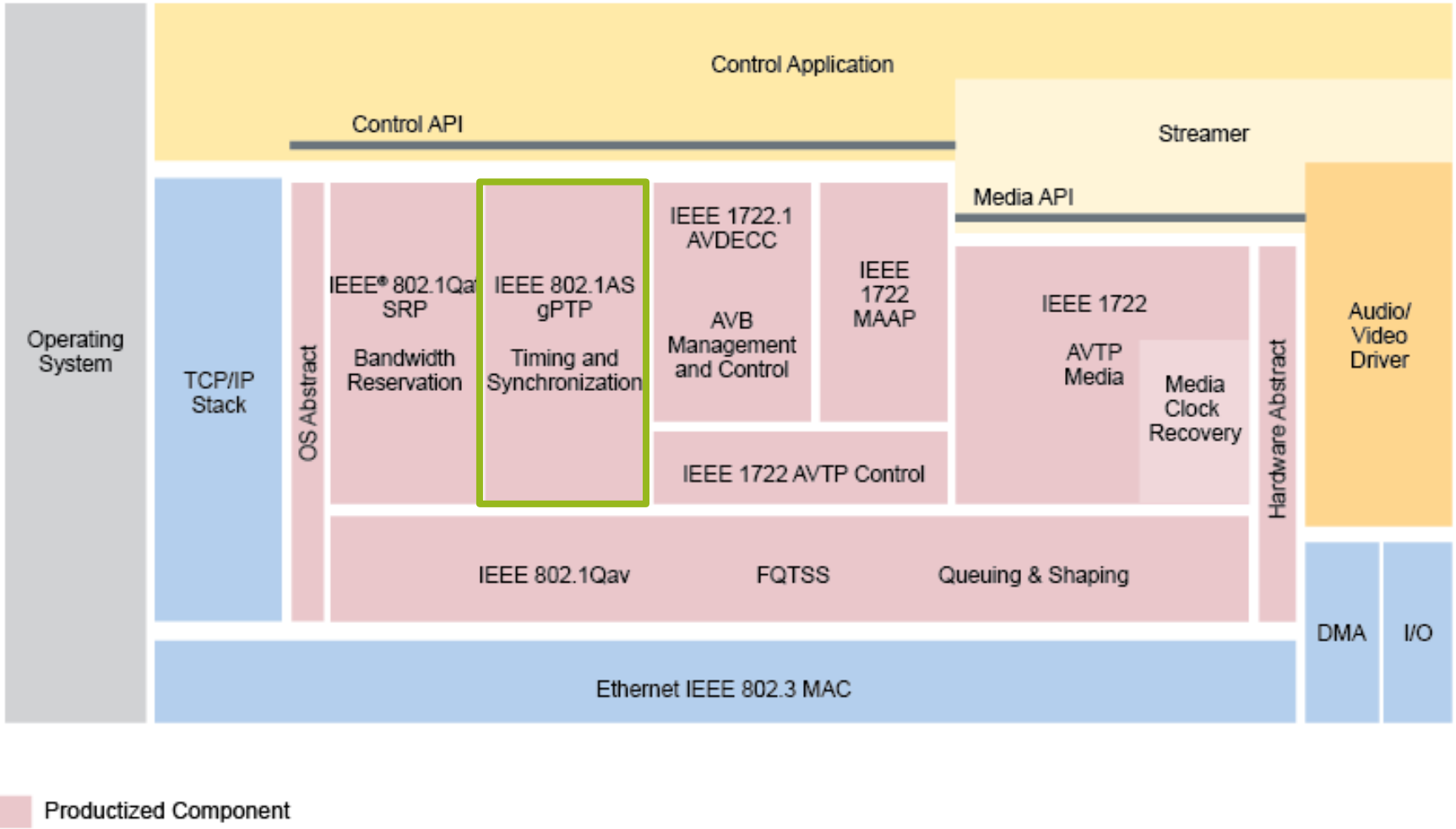

Software stack can run on Linux or RTOS

gPTP endpoint on i.MX RT1170 (FreeRTOS)

gPTP bridge on LS1028A (Linux)

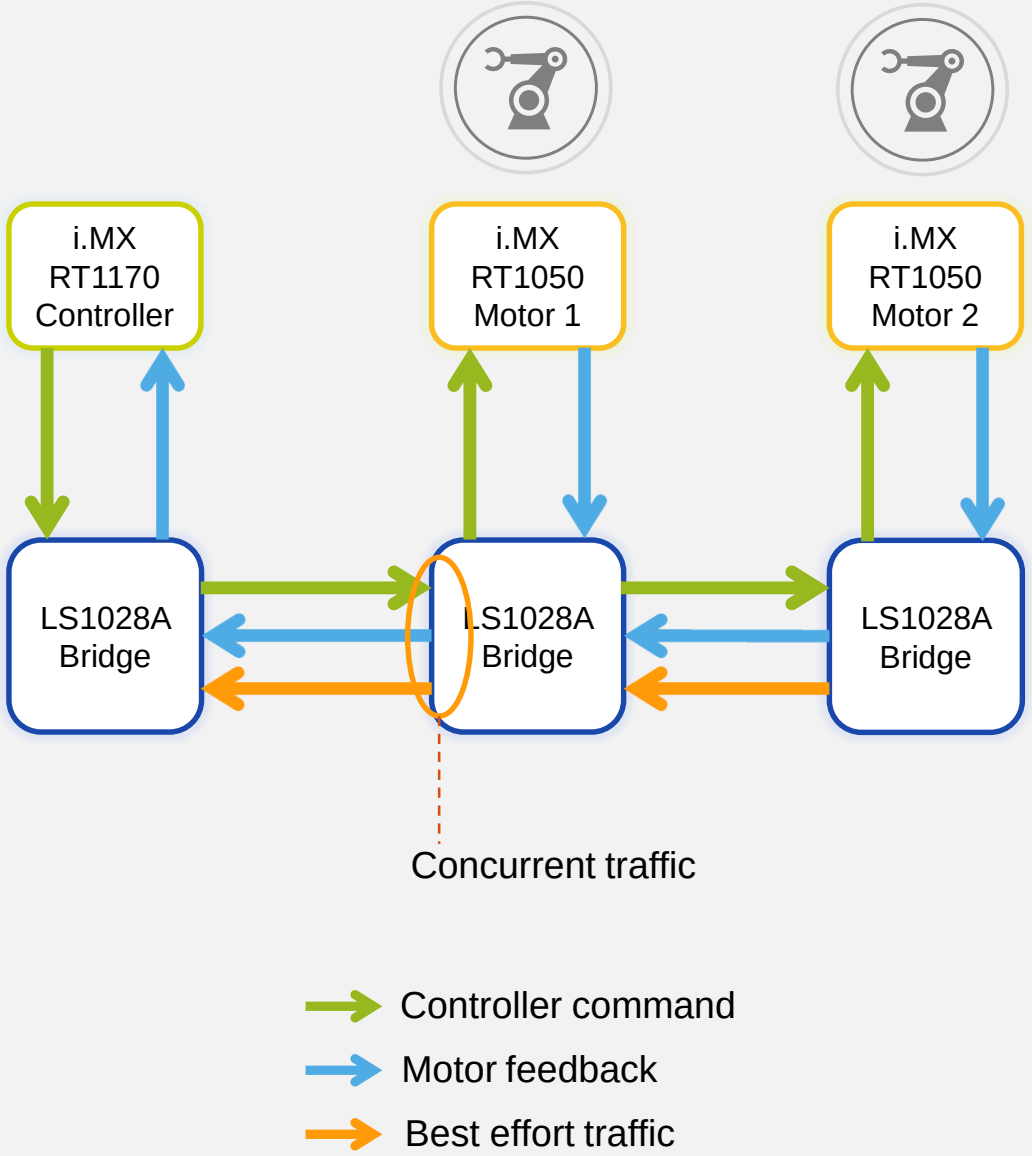

Distributed Motor Control Over TSN Featuring i.MX RT1170 Crossover MCU and LS1028A Applications Processor

- 802.1AS for network time synchronization
- 802.1Qbv for guaranteed transport latency and jitter
- i.MX RT1170 slaves driving PMSM motors with100µs Field Oriented Control loop
- i.MXRT1170 controller running position and velocity control loops with 250µs network cycle
- LS1028A acting as TSN bridges
- Isochronous scheduling shifted by 125µs between controller and slaves


TSN motor control with
i.MXRT1170/LS1028
Distributed motor control using Ethernet/TSN (Time Sensitive Networking)
802.1AS for network time synchronization
802.1Qbv for guaranteed transport latency and jitter
i.MXRT1170 Slaves driving PMSM motors using a 100µs Field Oriented Control loop
i.MXRT1170 Controller running position and velocity control loops with a 250µs network cycle
LS1028 acting as TSN bridges
TSN motor control with
i.MXRT1170/LS1028
M1
M2
C
B
B
B
Concurrent traffic
Controller command
Motor feedback
Best effort
www.nxp.com

BENEFITS TO GPTP SYNCHRONIZATION

Synchronization measured in nanoseconds

Uses standard Ethernet, shares data network

Available on NXP Layerscape, i.MX application processors and i.MX RT crossover MCUs

Open source and turnkey commercial software available

TSN AT NXP

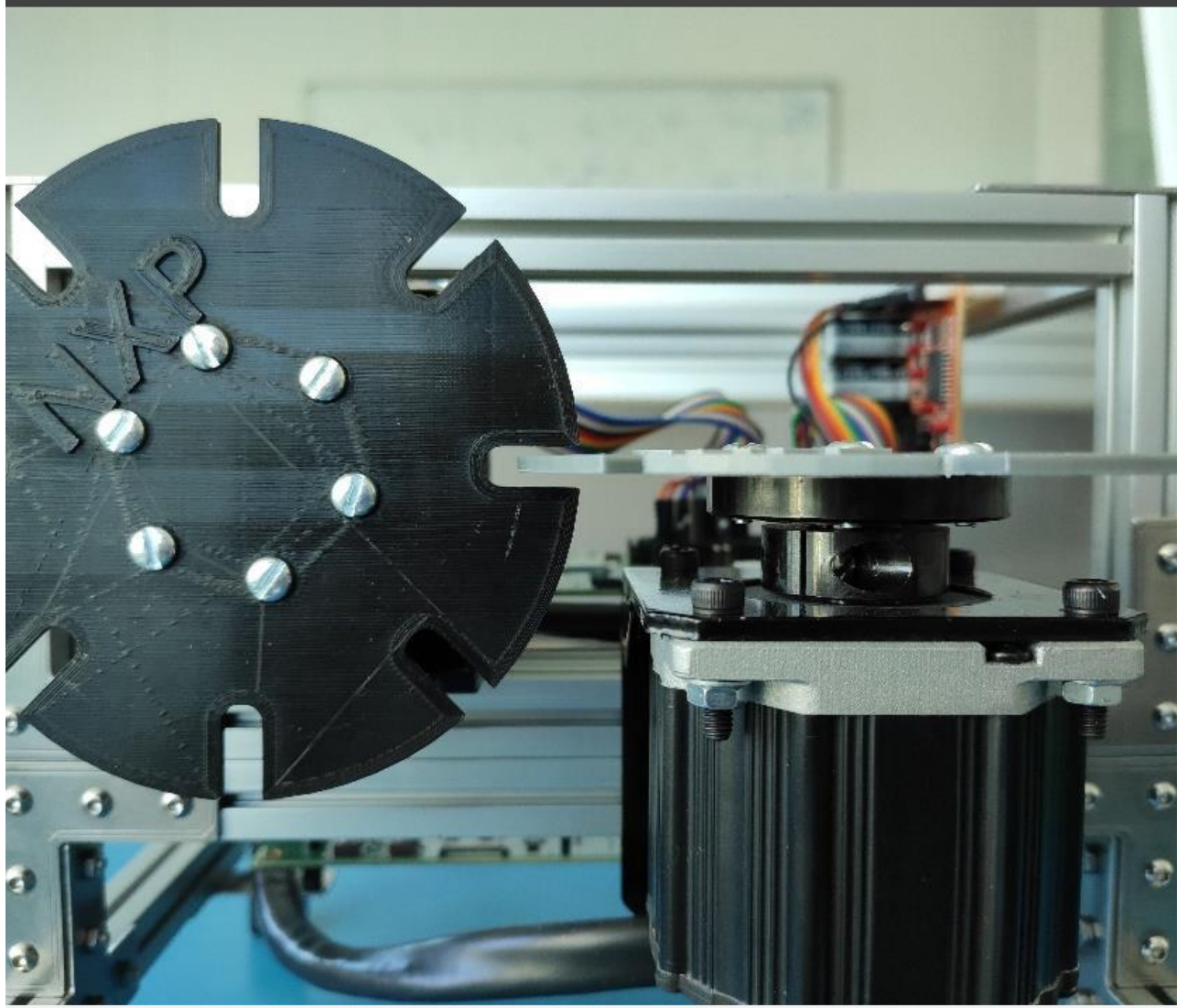

ADDITIONAL RESOURCES

Product Pages

- LS1028A application processor: https://www.nxp.com/LS1028A
- i.MX RT1170 crossover MCU: https://www.nxp.com/IMXRT1170
- i.MX RT1050 crossover MCU: https://www.nxp.com/IMXRT1050

Commercial Software

- AVB Software https://www.nxp.com/design/software/embedded-software/audio-video-bridging-software:AVB-SOFTWARE

SECURE CONNECTIONS
FOR A SMARTER WORLD