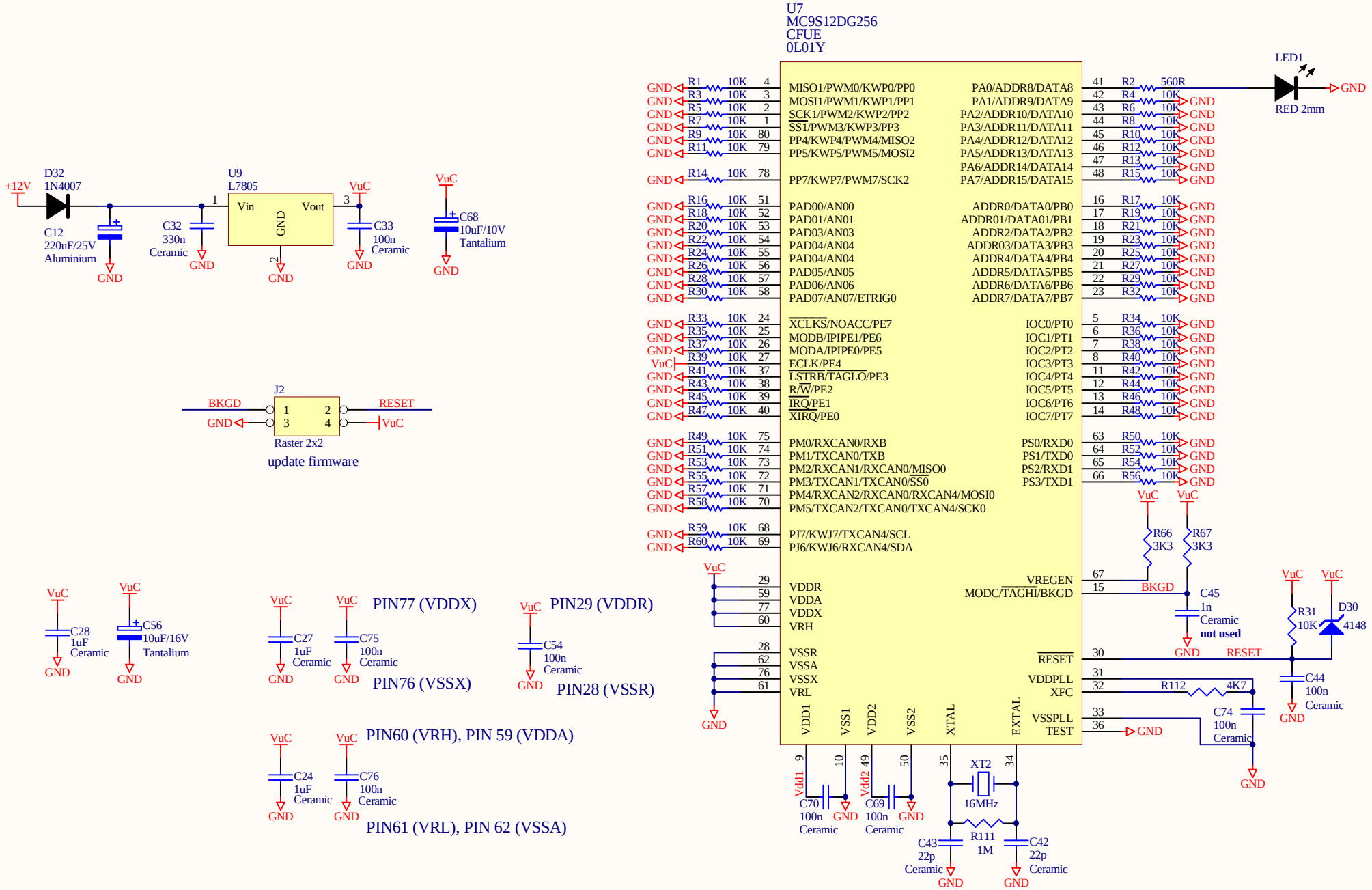
U7
MC9S12DG256
CFUE
0L01Y
D32
1N4007
+12V
C12
220uF/25V
Aluminium
C32
330n
Ceramic
U9
L7805
Vin
Vout
GND
C33
100n
Ceramic
C68
10uF/10V
Tantalium
VuC
GND
J2
BKGD
RESET
Raster 2x2
update firmware
C28
1uF
Ceramic
C56
10uF/16V
Tantalium
C27
1uF
Ceramic
C75
100n
Ceramic
PIN77 (VDDX)
PIN76 (VSSX)
C54
100n
Ceramic
PIN29 (VDDR)
PIN28 (VSSR)
C24
1uF
Ceramic
C76
100n
Ceramic
PIN60 (VRH), PIN 59 (VDDA)
PIN61 (VRL), PIN 62 (VSSA)
MISO1/PWM0/KWP0/PP0
MOSI1/PWM1/KWP1/PP1
SCK1/PWM2/KWP2/PP2
SS1/PWM3/KWP3/PP3
PP4/KWP4/PWM4/MISO2
PP5/KWP5/PWM5/MOSI2
PP7/KWP7/PWM7/SCK2
PAD00/AN00
PAD01/AN01
PAD03/AN03
PAD04/AN04
PAD04/AN04
PAD05/AN05
PAD06/AN06
PAD07/AN07/ETRIG0
XCLKS/NOACC/PE7
MODB/IPIPE1/PE6
MODA/IPIPE0/PE5
ECLK/PE4
LSTRB/TAGLO/PE3
R/W/PE2
IRQ/PE1
XIRQ/PE0
PM0/RXCAN0/RXB
PM1/TXCAN0/TXB
PM2/RXCAN1/RXCAN0/MISO0
PM3/TXCAN1/TXCAN0/SS0
PM4/RXCAN2/RXCAN0/RXCAN4/MOSI0
PM5/TXCAN2/TXCAN0/TXCAN4/SCK0
PJ7/KWJ7/TXCAN4/SCL
PJ6/KWJ6/RXCAN4/SDA
VDDR
VDDA
VDDX
VRH
VSSR
VSSA
VSSX
VRL
VDD1
VSS1
VDD2
VSS2
XTAL
EXTAL
PA0/ADDR8/DATA8
PA1/ADDR9/DATA9
PA2/ADDR10/DATA10
PA3/ADDR11/DATA11
PA4/ADDR12/DATA12
PA5/ADDR13/DATA13
PA6/ADDR14/DATA14
PA7/ADDR15/DATA15
ADDR0/DATA0/PB0
ADDR01/DATA01/PB1
ADDR2/DATA2/PB2
ADDR03/DATA3/PB3
ADDR4/DATA4/PB4
ADDR5/DATA5/PB5
ADDR6/DATA6/PB6
ADDR7/DATA7/PB7
IOC0/PT0
IOC1/PT1
IOC2/PT2
IOC3/PT3
IOC4/PT4
IOC5/PT5
IOC6/PT6
IOC7/PT7
PS0/RXD0
PS1/TXD0
PS2/RXD1
PS3/TXD1
VREGEN
MODC/TAGHI/BKGD
RESET
VDDPLL
XFC
VSSPLL
TEST
LED1
RED 2mm
R66
3K3
R67
3K3
C45
1n
Ceramic
not used
R31
10K
D30
4148
C44
100n
Ceramic
R112
4K7
C74
100n
Ceramic
XT2
16MHz
R111
1M
C43
22p
Ceramic
C42
22p
Ceramic
C70
100n
Ceramic
C69
100n
Ceramic